390-012
Splash-Proof EMI/RFI Cable Sealing Backshell
Light-Duty with Strain Relief
Type C - Direct Coupling - Low Profile

CONNECTOR DESIGNATORS

A-B*-C-D-E-F
G-H-J-K-L-S

*** Conn. Desig. B See Note 5**

DIRECT COUPLING

TYPE C OVERALL SHIELD TERMINATION

390 F S 012 M 16 05 L 6

- Product Series
- Connector Designator
- Angle and Profile
  - A = 90°
  - B = 45°
  - S = Straight
- Basic Part No.
- Finish (Table II)
- Shell Size (Table I)
- Cable Entry (Table V)
- Strain Relief Style (L, G)
- Length: S only (1/2 inch increments: e.g. 6 = 3 inches)

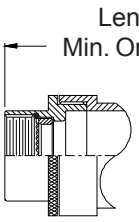

STYLE 2 (STRAIGHT See Note 1)

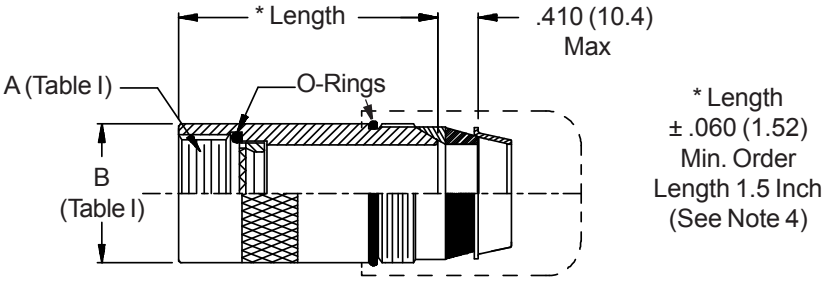

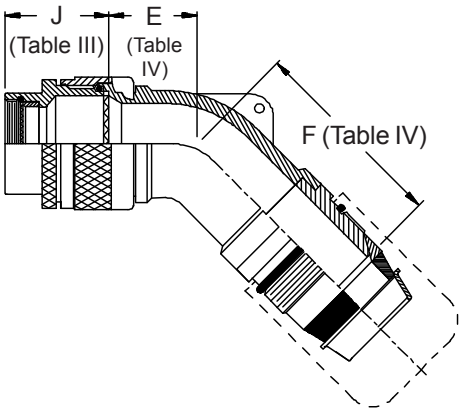

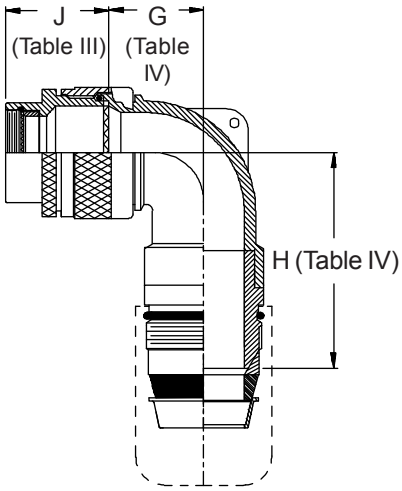

STYLE L
Light Duty
(Table V)

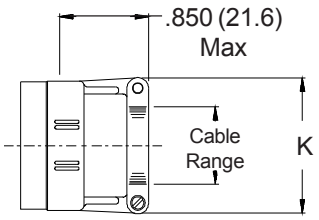

STYLE G
Light Duty
(Table V)

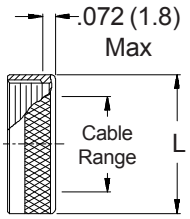

© 2005 Glenair, Inc. CAGE Code 06324 Printed in U.S.A.

TABLE III: FRONT ADAPTER			
	J Max - Conn. Designator		
Shell Size	A-E-F J-H-L-S	D-B-G-K	C
08/09	1.180 (30.0)	1.440 (36.6)	
10/11	1.180 (30.0)	1.440 (36.6)	
12/13	1.180 (30.0)	1.440 (36.6)	1.735 (44.1)
14/15	1.180 (30.0)	1.440 (36.6)	1.915 (48.6)
16/17	1.380 (35.0)	1.560 (39.6)	1.915 (48.6)
18/19	1.380 (35.0)	1.560 (39.6)	1.915 (48.6)
20/21	1.380 (35.0)	1.560 (39.6)	1.915 (48.6)
22/23	1.380 (35.0)	1.560 (39.6)	1.915 (48.6)
24/25	1.380 (35.0)	1.560 (39.6)	1.915 (48.6)
28/29	1.610 (40.9)	1.560 (39.6)	1.915 (48.6)
32/33	1.610 (40.9)	1.750 (44.5)	1.915 (48.6)
36	1.610 (40.9)	1.750 (44.5)	1.915 (48.6)
40	1.610 (40.9)	2.190 (55.6)	1.915 (48.6)

See inside back cover fold-out or pages 13 and 14 for Tables I and II.

1. When maximum cable entry (page 22) is exceeded, Style 2 will be supplied. (Function S only).
2. Metric dimensions (mm) are indicated in parentheses.
3. Cable range is defined as the accommodations range for the wire bundle or cable. Dimensions shown are not intended for inspection criteria.
4. Consult factory for shorter lengths on straight backshells.
5. When using Connector Designator B refer to pages 18 and 19 for part number development.

TABLE IV: CABLE ENTRY								
Elbow Size	E Max		F Max		G Max		H Max	
01	.457	(11.6)	1.700	(43.2)	.636	(16.2)	1.698	(43.1)
02	.457	(11.6)	1.700	(43.2)	.636	(16.2)	1.698	(43.1)
03	.630	(16.0)	1.748	(44.4)	.709	(18.0)	1.818	(46.2)
04	.692	(17.6)	1.808	(45.9)	.734	(18.6)	1.838	(46.7)
05	.755	(19.2)	1.898	(48.2)	.825	(21.0)	1.908	(48.5)
06	.848	(21.5)	1.998	(50.7)	.990	(25.1)	1.998	(50.7)
07	1.036	(26.3)	2.198	(55.8)	1.090	(27.7)	2.168	(55.1)
08	1.130	(28.7)	2.338	(59.4)	1.325	(33.7)	2.278	(57.9)
09	1.130	(28.7)	2.338	(59.4)	1.325	(33.7)	2.278	(57.9)
10	1.130	(28.7)	2.338	(59.4)	1.325	(33.7)	2.278	(57.9)

TABLE V: CABLE ENTRY								
Dash No.	K Max		L Max		Cable Range Min		Cable Range Max	
01	.781	(19.8)	.593	(15.1)	.062	(1.6)	.125	(3.2)
02	.968	(24.6)	.718	(18.2)	.125	(3.2)	.250	(6.4)
03	1.046	(26.6)	.843	(21.4)	.250	(6.4)	.375	(9.5)
04	1.156	(29.4)	.968	(24.6)	.375	(9.5)	.500	(12.7)
05	1.218	(30.9)	1.109	(28.2)	.500	(12.7)	.625	(15.9)
06	1.343	(34.1)	1.218	(30.9)	.625	(15.9)	.750	(19.1)
07	1.468	(37.3)	1.343	(34.1)	.750	(19.1)	.875	(22.2)
08	1.593	(40.5)	1.468	(37.3)	.875	(22.2)	1.000	(25.4)
09	1.718	(43.6)	1.593	(40.5)	1.000	(25.4)	1.125	(28.6)
10	1.843	(46.8)	1.718	(43.6)	1.125	(28.6)	1.250	(31.8)

© 2005 Glenair, Inc.