165-Bump BGA
Commercial Temp
Industrial Temp

# 18Mb Burst of 2 SigmaQuad SRAM

200 MHz–167 MHz
2.5 V $V_{DD}$
1.8 V or 1.5 V I/O

## Features

- Simultaneous Read and Write SigmaQuad™ Interface
- JEDEC-standard pinout and package
- Dual DoubleData Rate interface
- Byte Write controls sampled at data-in time
- Burst of 2 Read and Write
- 2.5 V +100/–100 mV core power supply
- 1.5 V or 1.8 V HSTL Interface
- Pipelined read operation
- Fully coherent read and write pipelines
- ZQ mode pin for programmable output drive strength
- IEEE 1149.1 JTAG-compliant Boundary Scan
- Pin-compatible with future 36Mb, 72Mb, and 144Mb devices
- RoHS-compliant 165-bump, 13 mm x 15 mm, 1 mm bump pitch BGA package

## SigmaRAM™ Family Overview

GS8180QV18/36B are built in compliance with the SigmaQuad SRAM pinout standard for Separate I/O synchronous SRAMs. They are18,874,368-bit (18Mb) SRAMs. These are the first in a family of wide, very low voltage HSTL I/O SRAMs designed to operate at the speeds needed to implement economical high performance networking systems.

SigmaQuad SRAMs are offered in a number of configurations. Some emulate and enhance other synchronous separate I/O SRAMs. A higher performance SDR (Single Data Rate) Burst of 2 version is also offered. The logical differences between the protocols employed by these RAMs hinge mainly on various combinations of address bursting, output data registering, and write cueing. Along with the Common I/O family of SigmaRAMs, the SigmaQuad family of SRAMs allows a user to implement the interface protocol best suited to the task at hand.

## Clocking and Addressing Schemes

A Burst of 2 SigmaQuad SRAM is a synchronous device. It employs two input register clock inputs, K and $\overline{K}$. K and $\overline{K}$ are independent single-ended clock inputs, not differential inputs to a single differential clock input buffer. The device also allows the user to manipulate the output register clock inputs quasi independently with the C and $\overline{C}$ clock inputs. C and $\overline{C}$ are also independent single-ended clock inputs, not differential inputs. If the C clocks are tied high, the K clocks are routed internally to fire the output registers instead.

Each internal read and write operation in a SigmaQuad-II B2 RAM is two times wider than the device I/O bus. An input data bus de-multiplexer is used to accumulate incoming data before it is simultaneously written to the memory array. An output data multiplexer is used to capture the data produced from a single memory array read and then route it to the appropriate output drivers as needed. Therefore the address field of a SigmaQuad-II B2 RAM is always one address pin less than the advertised index depth (e.g., the 2M x 8 has a 1M addressable index).

### Parameter Synopsis*

| | -200 | -167 |
|---|---|---|
| tKHKH | 5.0 ns | 6.0 ns |
| tKHQV | 2.3 ns | 2.5 ns |


© 2007, GSI Technology
Specifications cited are subject to change without notice. For latest documentation see http://www.gsitechnology.com.

## 1M x 18 SigmaQuad SRAM—Top View (Package D)

| | 1 | 2 | 3 | 4 | 5 | 6 | 7 | 8 | 9 | 10 | 11 |
|---|---|---|---|---|---|---|---|---|---|---|---|
| A | NC | MCL/SA (144Mb) | NC/SA (36Mb) | $\overline{W}$ | $\overline{BW1}$ | $\overline{K}$ | NC | $\overline{R}$ | SA | MCL/SA (72Mb) | NC |
| B | NC | Q9 | D9 | SA | NC | K | $\overline{BW0}$ | SA | NC | NC | Q8 |
| C | NC | NC | D10 | $V_{SS}$ | SA | SA | SA | $V_{SS}$ | NC | Q7 | D8 |
| D | NC | D11 | Q10 | $V_{SS}$ | $V_{SS}$ | $V_{SS}$ | $V_{SS}$ | $V_{SS}$ | NC | NC | D7 |
| E | NC | NC | Q11 | $V_{DDQ}$ | $V_{SS}$ | $V_{SS}$ | $V_{SS}$ | $V_{DDQ}$ | NC | D6 | Q6 |
| F | NC | Q12 | D12 | $V_{DDQ}$ | $V_{DD}$ | $V_{SS}$ | $V_{DD}$ | $V_{DDQ}$ | NC | NC | Q5 |
| G | NC | D13 | Q13 | $V_{DDQ}$ | $V_{DD}$ | $V_{SS}$ | $V_{DD}$ | $V_{DDQ}$ | NC | NC | D5 |
| H | NC | $V_{REF}$ | $V_{DDQ}$ | $V_{DDQ}$ | $V_{DD}$ | $V_{SS}$ | $V_{DD}$ | $V_{DDQ}$ | $V_{DDQ}$ | $V_{REF}$ | ZQ |
| J | NC | NC | D14 | $V_{DDQ}$ | $V_{DD}$ | $V_{SS}$ | $V_{DD}$ | $V_{DDQ}$ | NC | Q4 | D4 |
| K | NC | NC | Q14 | $V_{DDQ}$ | $V_{DD}$ | $V_{SS}$ | $V_{DD}$ | $V_{DDQ}$ | NC | D3 | Q3 |
| L | NC | Q15 | D15 | $V_{DDQ}$ | $V_{SS}$ | $V_{SS}$ | $V_{SS}$ | $V_{DDQ}$ | NC | NC | Q2 |
| M | NC | NC | D16 | $V_{SS}$ | $V_{SS}$ | $V_{SS}$ | $V_{SS}$ | $V_{SS}$ | NC | Q1 | D2 |
| N | NC | D17 | Q16 | $V_{SS}$ | SA | SA | SA | $V_{SS}$ | NC | NC | D1 |
| P | NC | NC | Q17 | SA | SA | C | SA | SA | NC | D0 | Q0 |
| R | TDO | TCK | SA | SA | SA | $\overline{C}$ | SA | SA | SA | TMS | TDI |

11 x 15 Bump BGA—13 x 15 $mm^2$ Body—1 mm Bump Pitch

Notes:
1. Expansion addresses: A3 for 36Mb, A10 for 72Mb, A2 for 144Mb
2. $\overline{BW0}$ controls writes to D0:D8. $\overline{BW1}$ controls writes to D9:D17.
3. MCL = Must Connect Low
4. It is recommended that H1 be tied low for compatibility with future devices.

 © 2007, GSI Technology
Specifications cited are subject to change without notice. For latest documentation see http://www.gsitechnology.com.

512K x 36 SigmaQuad SRAM—Top View (Package D)

| | 1 | 2 | 3 | 4 | 5 | 6 | 7 | 8 | 9 | 10 | 11 |
|---|---|---|---|---|---|---|---|---|---|---|---|
| A | NC | MCL/SA (288Mb) | NC/SA (72Mb) | $\overline{W}$ | $\overline{BW2}$ | $\overline{K}$ | $\overline{BW1}$ | $\overline{R}$ | NC/SA (36Mb) | MCL/SA (144Mb) | NC |
| B | Q27 | Q18 | D18 | SA | $\overline{BW3}$ | K | $\overline{BW0}$ | SA | D17 | Q17 | Q8 |
| C | D27 | Q28 | D19 | $V_{SS}$ | SA | SA | SA | $V_{SS}$ | D16 | Q7 | D8 |
| D | D28 | D20 | Q19 | $V_{SS}$ | $V_{SS}$ | $V_{SS}$ | $V_{SS}$ | $V_{SS}$ | Q16 | D15 | D7 |
| E | Q29 | D29 | Q20 | $V_{DDQ}$ | $V_{SS}$ | $V_{SS}$ | $V_{SS}$ | $V_{DDQ}$ | Q15 | D6 | Q6 |
| F | Q30 | Q21 | D21 | $V_{DDQ}$ | $V_{DD}$ | $V_{SS}$ | $V_{DD}$ | $V_{DDQ}$ | D14 | Q14 | Q5 |
| G | D30 | D22 | Q22 | $V_{DDQ}$ | $V_{DD}$ | $V_{SS}$ | $V_{DD}$ | $V_{DDQ}$ | Q13 | D13 | D5 |
| H | NC | $V_{REF}$ | $V_{DDQ}$ | $V_{DDQ}$ | $V_{DD}$ | $V_{SS}$ | $V_{DD}$ | $V_{DDQ}$ | $V_{DDQ}$ | $V_{REF}$ | ZQ |
| J | D31 | Q31 | D23 | $V_{DDQ}$ | $V_{DD}$ | $V_{SS}$ | $V_{DD}$ | $V_{DDQ}$ | D12 | Q4 | D4 |
| K | Q32 | D32 | Q23 | $V_{DDQ}$ | $V_{DD}$ | $V_{SS}$ | $V_{DD}$ | $V_{DDQ}$ | Q12 | D3 | Q3 |
| L | Q33 | Q24 | D24 | $V_{DDQ}$ | $V_{SS}$ | $V_{SS}$ | $V_{SS}$ | $V_{DDQ}$ | D11 | Q11 | Q2 |
| M | D33 | Q34 | D25 | $V_{SS}$ | $V_{SS}$ | $V_{SS}$ | $V_{SS}$ | $V_{SS}$ | D10 | Q1 | D2 |
| N | D34 | D26 | Q25 | $V_{SS}$ | SA | SA | SA | $V_{SS}$ | Q10 | D9 | D1 |
| P | Q35 | D35 | Q26 | SA | SA | C | SA | SA | Q9 | D0 | Q0 |
| R | TDO | TCK | SA | SA | SA | $\overline{C}$ | SA | SA | SA | TMS | TDI |

11 x 15 Bump BGA—13 x 15 $mm^2$ Body—1 mm Bump Pitch

Notes:
1. Expansion addresses: A9 for 36Mb, A3 for 72Mb, A10 for 144Mb, A2 for 288Mb
2. $\overline{BW0}$ controls writes to D0:D8. $\overline{BW1}$ controls writes to D9:D17.
3. $\overline{BW2}$ controls writes to D18:D26. $\overline{BW3}$ controls writes to D27:D35.
4. MCL = Must Connect Low
5. It is recommended that H1 be tied low for compatibility with future devices.

 © 2007, GSI Technology
Specifications cited are subject to change without notice. For latest documentation see http://www.gsitechnology.com.

## Pin Description Table

| Symbol | Description | Type | Comments |
|---|---|---|---|
| SA | Synchronous Address Inputs | Input | — |
| NC | No Connect | — | — |
| $\overline{R}$ | Synchronous Read | Input | Active Low |
| $\overline{W}$ | Synchronous Write | Input | Active Low |
| $\overline{BW0}$–$\overline{BW1}$ | Synchronous Byte Writes | Input | Active Low |
| $\overline{BW2}$–$\overline{BW3}$ | Synchronous Byte Writes | Input | Active Low (x36 only) |
| K | Input Clock | Input | Active High |
| $\overline{K}$ | Input Clock | Input | Active Low |
| C | Output Clock | Input | Active High |
| $\overline{C}$ | Output Clock | Input | Active Low |
| TMS | Test Mode Select | Input | — |
| TDI | Test Data Input | Input | — |
| TCK | Test Clock Input | Input | — |
| TDO | Test Data Output | Output | — |
| $V_{REF}$ | HSTL Input Reference Voltage | Input | — |
| ZQ | Output Impedance Matching Input | Input | — |
| MCL | Must Connect Low | — | — |
| D0–D17 | Synchronous Data Inputs | Input | |
| D18–D35 | Synchronous Data Inputs | Input | |
| Q0–Q17 | Synchronous Data Outputs | Output | |
| Q18–Q35 | Synchronous Data Outputs | Output | |
| $V_{DD}$ | Power Supply | Supply | 2.5 V Nominal |
| $V_{DDQ}$ | Isolated Output Buffer Supply | Supply | 1.8 or 1.5 V Nominal |
| $V_{SS}$ | Power Supply: Ground | Supply | — |

Notes:
1. NC = Not Connected to die or any other pin
2. C, $\overline{C}$, K, or $\overline{K}$ cannot be set to $V_{REF}$ voltage.

 © 2007, GSI Technology
Specifications cited are subject to change without notice. For latest documentation see http://www.gsitechnology.com.

## Background

Separate I/O SRAMs, from a system architecture point of view, are attractive in applications where alternating reads and writes are needed. Therefore, the SigmaQuad SRAM interface and truth table are optimized for alternating reads and writes. Separate I/O SRAMs are unpopular in applications where multiple reads or multiple writes are needed because burst read or write transfers from Separate I/O SRAMs can cut the RAM's bandwidth in half.

A SigmaQuad SRAM can begin an alternating sequence of reads and writes with either a read or a write. In order for any separate I/O SRAM that shares a common address between its two ports to keep both ports running all the time, the RAM must implement some sort of burst transfer protocol. The burst must be at least long enough to cover the time the opposite port is receiving instructions on what to do next. The rate at which a RAM can accept a new random address is the most fundamental performance metric for the RAM. Each of the three SigmaQuad SRAMs support similar address rates because random address rate is determined by the internal performance of the RAM and they are all based on the same internal circuits. Differences between the truth tables of the different SigmaQuad SRAMs, or any other Separate I/O SRAMs, follow from differences in how the RAM's interface is contrived to interact with the rest of the system. Each mode of operation has its own advantages and disadvantages. The user should consider the nature of the work to be done by the RAM to evaluate which version is best suited to the application at hand.

### Burst of 2 SigmaQuad SRAM DDR Read

The read port samples the status of the Address Input and $\overline{R}$ pins at each rising edge of K. A low on the Read Enable-bar pin, $\overline{R}$, begins a read cycle. Data can be clocked out one cycle later and again one half cycle after that. A high on the Read Enable-bar pin, $\overline{R}$, begins a read port deselect cycle.

## Burst of 2 Double Data Rate SigmaQuad SRAM Read First

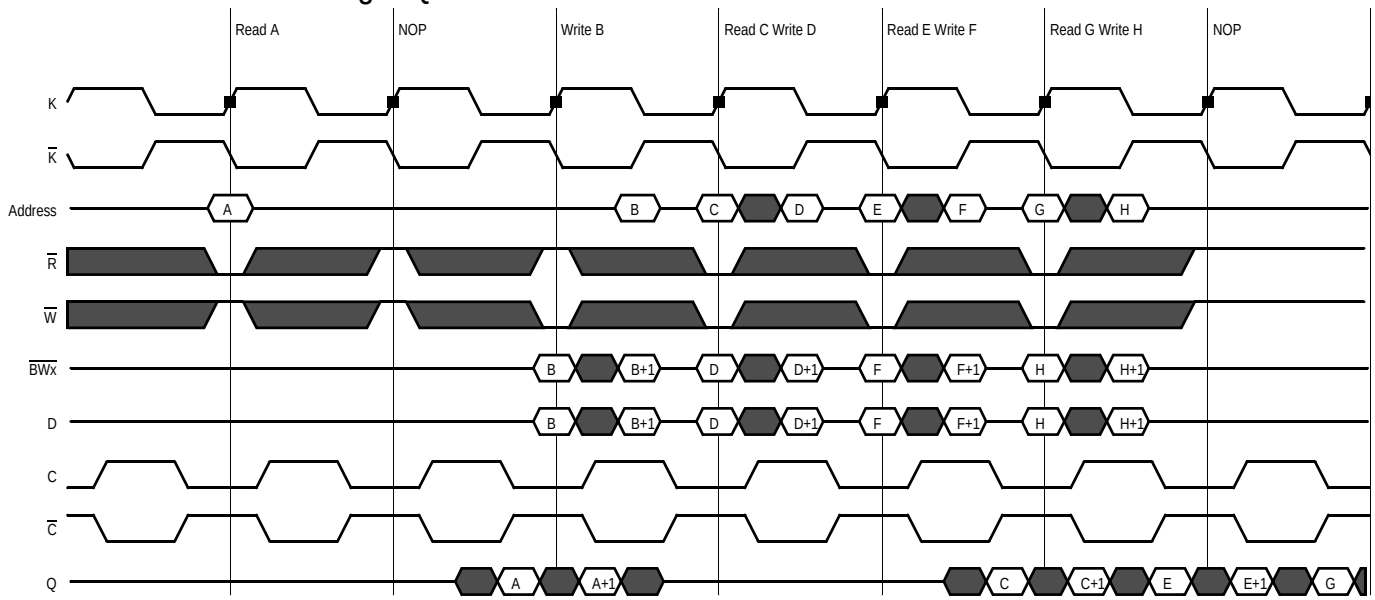


 © 2007, GSI Technology

Specifications cited are subject to change without notice. For latest documentation see http://www.gsitechnology.com.

### Burst of 2 SigmaQuad SRAM DDR Write

The write port samples the status of the $\overline{W}$ pin at each rising edge of K and the Address Input pins on the following rising edge of $\overline{K}$. A low on the Write Enable-bar pin, $\overline{W}$, begins a write cycle. The first of the data-in pairs associated with the write command is clocked in with the same rising edge of K used to capture the write command. The second of the two data in transfers is captured on the rising edge of $\overline{K}$ along with the write address. A high on $\overline{W}$ causes a write port deselect cycle.

### Burst of 2 Double Data Rate SigmaQuad SRAM Write First

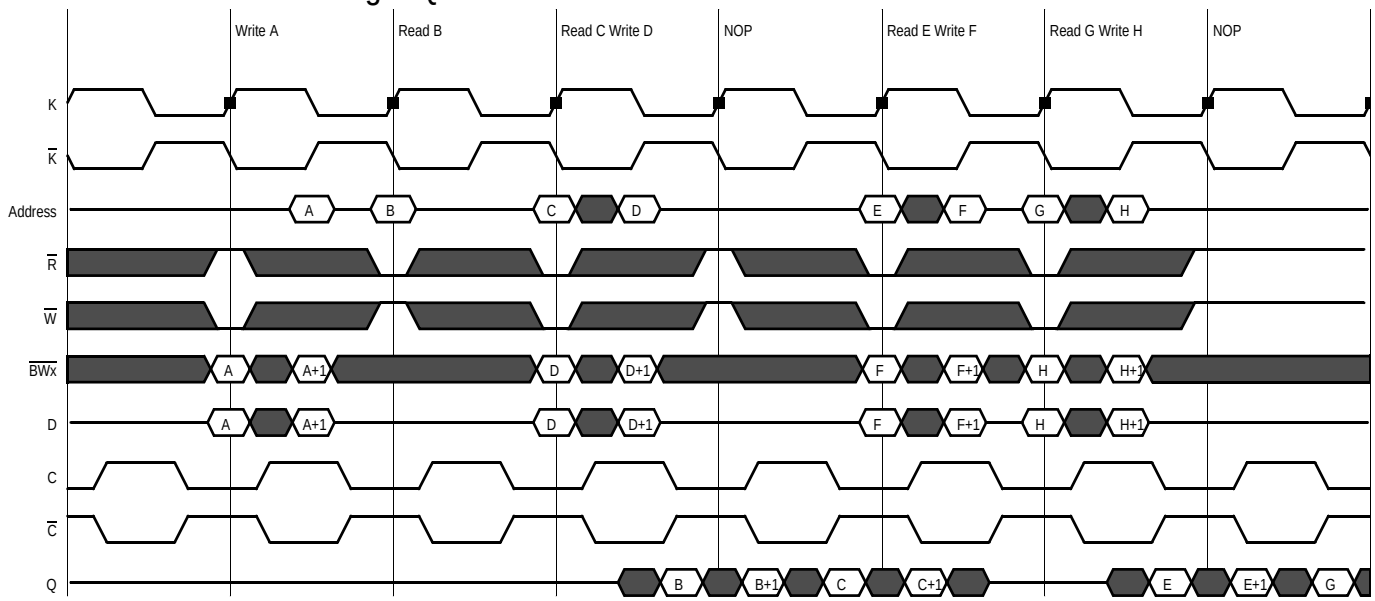


## Special Functions

### Byte Write Control

Byte Write Enable pins are sampled at the same time that Data In is sampled. A high on the Byte Write Enable pin associated with a particular byte (e.g., $\overline{BW0}$ controls D0–D8 inputs) will inhibit the storage of that particular byte, leaving whatever data may be stored at the current address at that byte location undisturbed. Any or all of the Byte Write Enable pins may be driven high or low during the data in sample times in a write sequence.

Each write enable command and write address loaded into the RAM provides the base address for a 2 beat data transfer. The x18 version of the RAM, for example, may write 36 bits in association with each address loaded. Any 9-bit byte may be masked in any write sequence.

 © 2007, GSI Technology
Specifications cited are subject to change without notice. For latest documentation see http://www.gsitechnology.com.

## Example x18 RAM Write Sequence using Byte Write Enables

| Data In Sample Time | $\overline{BW0}$ | $\overline{BW1}$ | D0–D8 | D9–D17 |
|---|---|---|---|---|
| Beat 1 | 0 | 1 | Data In | Don't Care |
| Beat 2 | 1 | 0 | Don't Care | Data In |

## Resulting Write Operation

| Beat 1<br>D0–D8 | Beat 1<br>D9–D17 | Beat 2<br>D0–D8 | Beat 2<br>D9–D17 |
|---|---|---|---|
| Written | Unchanged | Unchanged | Written |

### Output Register Control

SigmaQuad SRAMs offer two mechanisms for controlling the output data registers. Typically, control is handled by the Output Register Clock inputs, C and $\overline{C}$. The Output Register Clock inputs can be used to make small phase adjustments in the firing of the output registers by allowing the user to delay driving data out as much as a few nanoseconds beyond the next rising edges of the K and $\overline{K}$ clocks. If the C and $\overline{C}$ clock inputs are tied high, the RAM reverts to K and $\overline{K}$ control of the outputs, allowing the RAM to function as a conventional pipelined read SRAM.

 © 2007, GSI Technology
Specifications cited are subject to change without notice. For latest documentation see http://www.gsitechnology.com.

## Example Four Bank Depth Expansion Schematic

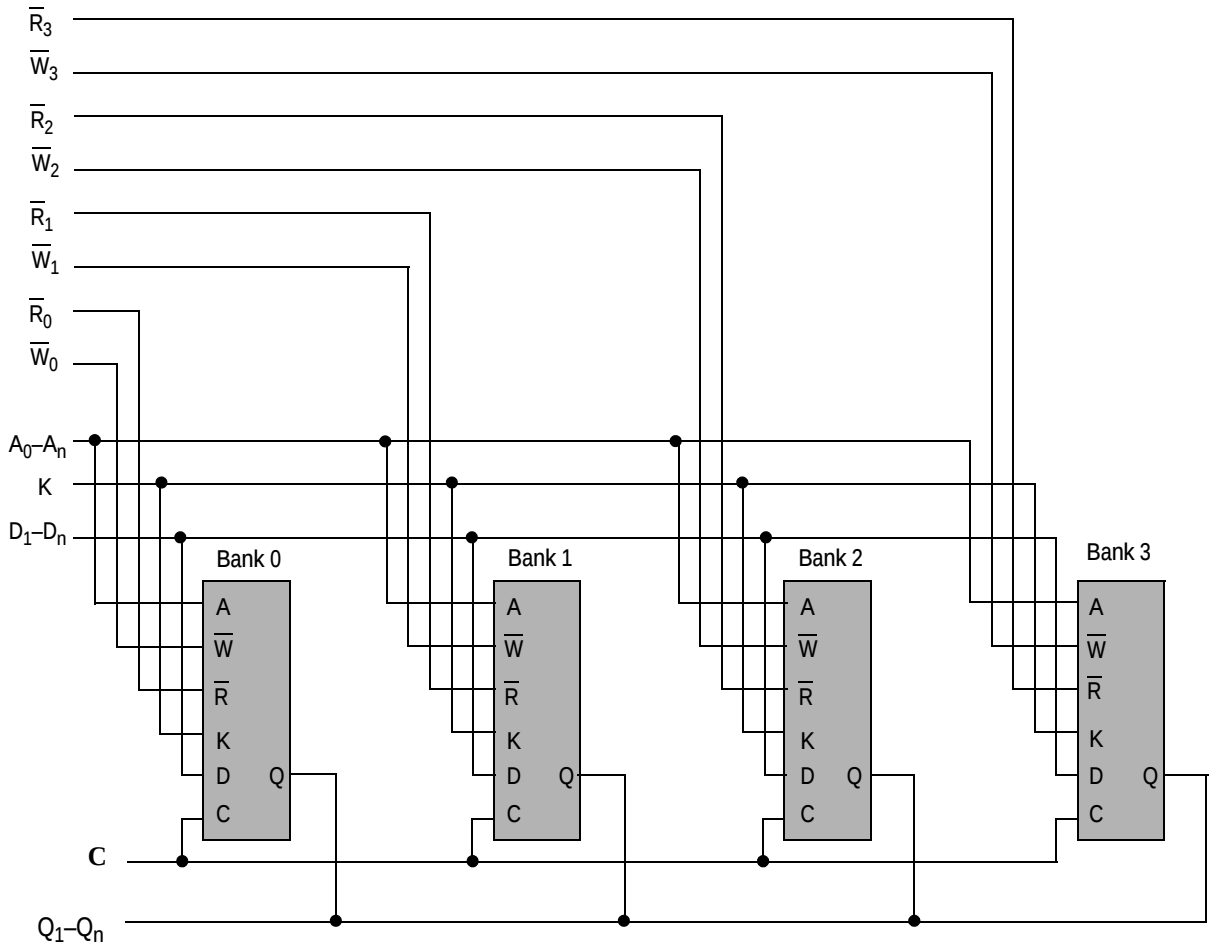


Note: For simplicity $\overline{BWn}$, $\overline{K}$, and $\overline{C}$ are not shown.

 © 2007, GSI Technology
Specifications cited are subject to change without notice. For latest documentation see http://www.gsitechnology.com.

## Burst of 2 SigmaQuad SRAM Depth Expansion

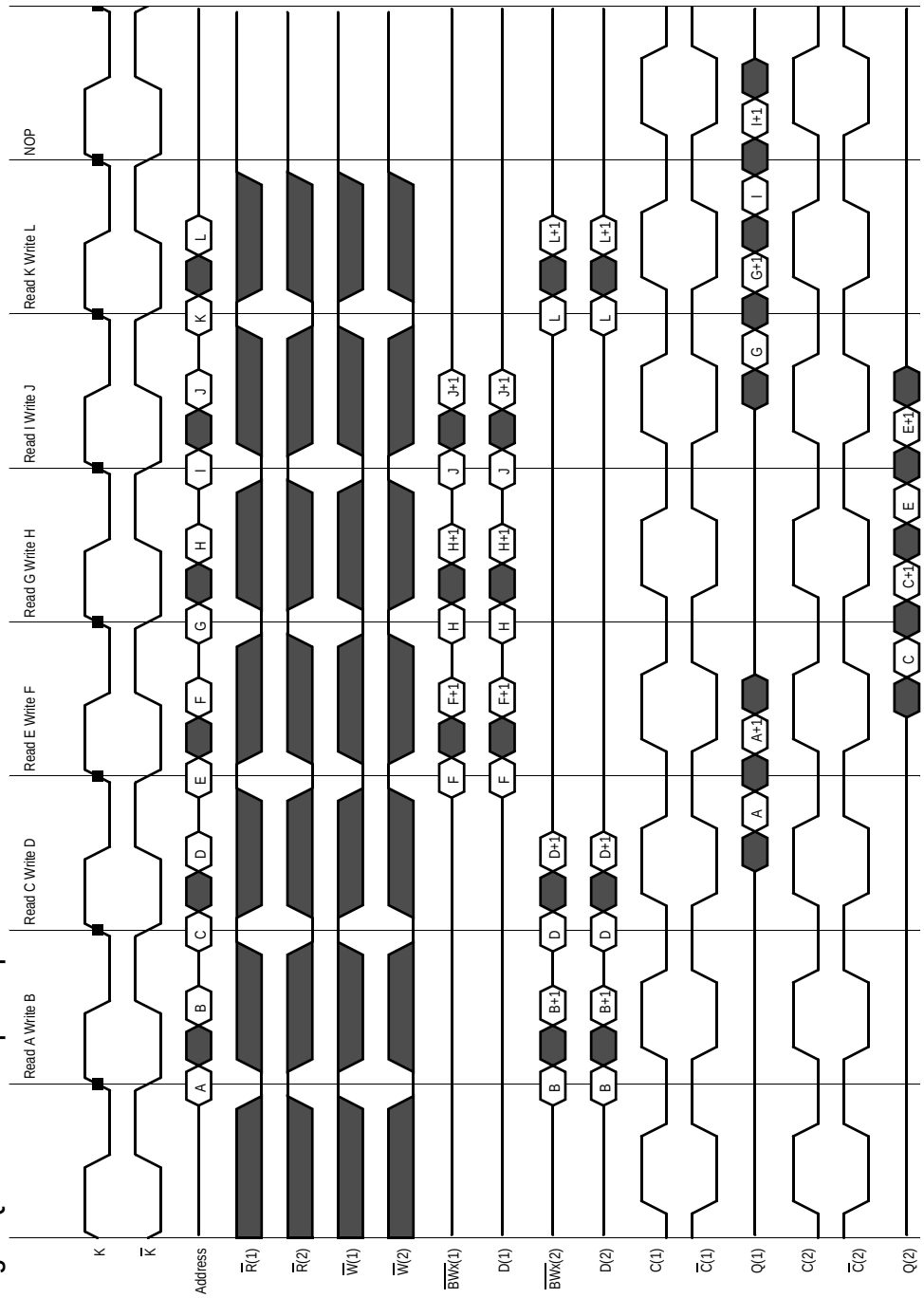


 © 2007, GSI Technology

Specifications cited are subject to change without notice. For latest documentation see http://www.gsitechnology.com.

### FLXDrive-II Output Driver Impedance Control

HSTL I/O SigmaQuad-II SRAMs are supplied with programmable impedance output drivers. The ZQ pin must be connected to VSS via an external resistor, RQ, to allow the SRAM to monitor and adjust its output driver impedance. The value of RQ must be 5X the value of the desired RAM output impedance. The allowable range of RQ to guarantee impedance matching continuously is between 150Ω and 300Ω. Periodic readjustment of the output driver impedance is necessary as the impedance is affected by drifts in supply voltage and temperature. The SRAM's output impedance circuitry compensates for drifts in supply voltage and temperature. A clock cycle counter periodically triggers an impedance evaluation, resets and counts again. Each impedance evaluation may move the output driver impedance level one step at a time towards the optimum level. The output driver is implemented with discrete binary weighted impedance steps.

### Burst of 2 Coherency and Pass Through Functions

Because the Burst of 2 read and write commands are loaded at the same time, there may be some confusion over what constitutes "coherent" operation. Normally, one would expect a RAM to produce the just-written data when it is read immediately after a write. This is true of the Burst of 2 except in one case, as is illustrated in the following diagram. If the user holds the same address value in a given K clock cycle, loading the same address as a read address and then as a matching write address, the Burst of 2 will read or "Pass-thru" the latest data input, rather than the data from the previously completed write operation.

Burst of 2 Coherency and Pass Through Functions

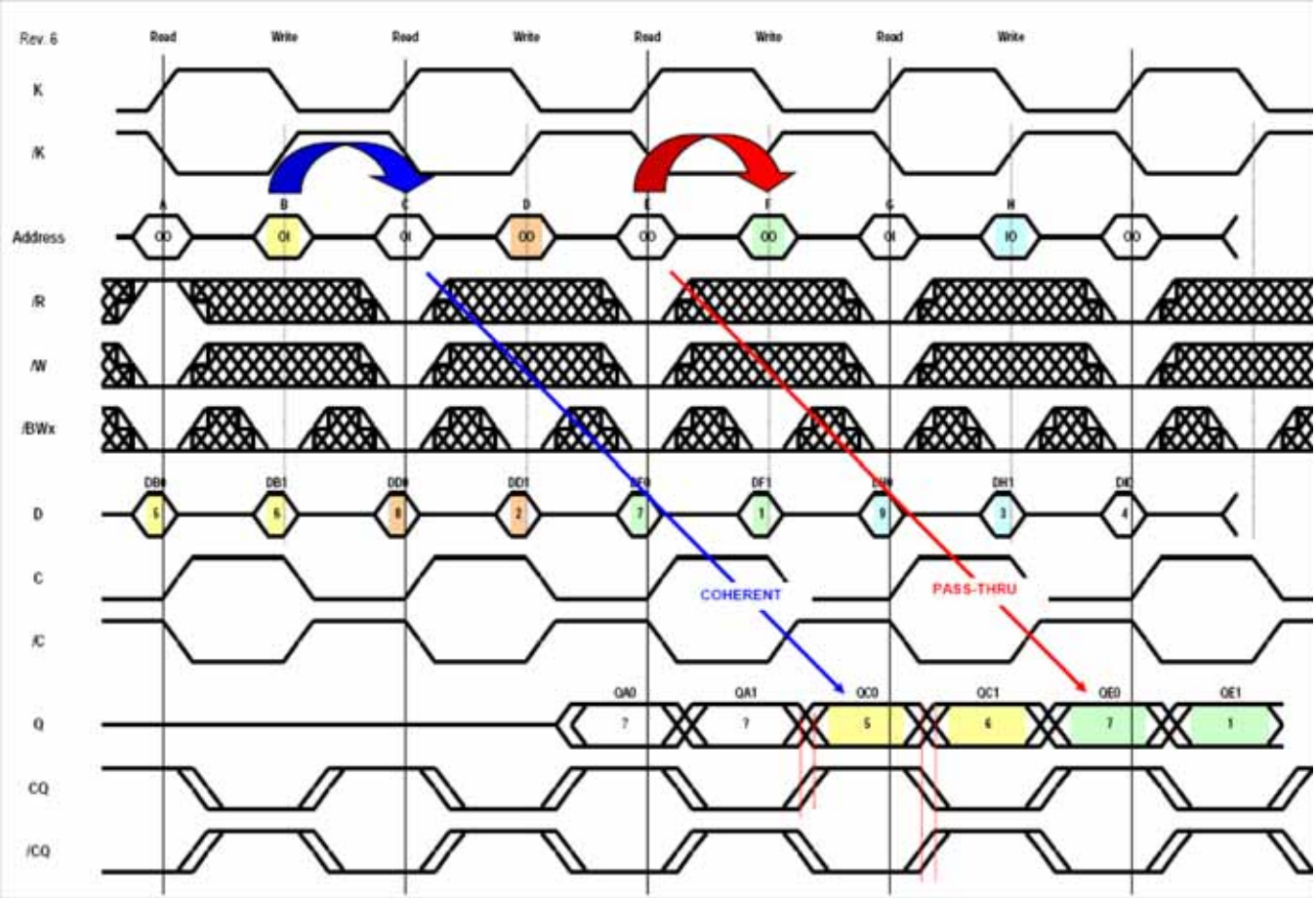


 © 2007, GSI Technology

Specifications cited are subject to change without notice. For latest documentation see http://www.gsitechnology.com.

## Separate I/O Burst of 2 SigmaQuad SRAM Read Truth Table

| A | $\overline{R}$ | Output Next State | Q | Q |
|---|---|---|---|---|
| K↑ ($t_n$) | K↑ ($t_n$) | K↑ ($t_n$) | K↑ ($t_{n+1}$) | $\overline{K}$↑ ($t_{n+1½}$) |
| X | 1 | Deselect | Hi-Z | Hi-Z |
| V | 0 | Read | Q0 | Q1 |

Notes:
1. X = Don't Care, 1 = High, 0 = Low, V = Valid.
2. $\overline{R}$ is evaluated on the rising edge of K.
3. Q0 and Q1 are the first and second data output transfers in a read.

## Separate I/O Burst of 2 SigmaQuad SRAM Write Truth Table

| A | $\overline{W}$ | $\overline{BWn}$ | $\overline{BWn}$ | Input Next State | D | D |
|---|---|---|---|---|---|---|
| $\overline{K}$↑ ($t_{n+½}$) | K↑ ($t_n$) | K↑ ($t_n$) | $\overline{K}$↑ ($t_{n+½}$) | K↑, $\overline{K}$↑ (tn), (tn + ½) | K↑ ($t_n$) | $\overline{K}$↑ ($t_{n+½}$) |
| V | 0 | 0 | 0 | Write Byte Dx0, Write Byte Dx1 | D0 | D1 |
| V | 0 | 0 | 1 | Write Byte Dx0, Write Abort Byte Dx1 | D0 | X |
| V | 0 | 1 | 0 | Write Abort Byte Dx0, Write Byte Dx1 | X | D1 |
| X | 0 | 1 | 1 | Write Abort Byte Dx0, Write Abort Byte Dx1 | X | X |
| X | 1 | X | X | Deselect | X | X |

Notes:
1. X = Don't Care, H = High, L = Low, V = Valid.
2. $\overline{W}$ is evaluated on the rising edge of K.
3. D0 and D1 are the first and second data input transfers in a write.
4. $\overline{BWn}$ represents any of the Byte Write Enable inputs ($\overline{BW0}$, $\overline{BW1}$, etc.).

## x18 Byte Write Enable ($\overline{BWn}$) Truth Table

| $\overline{BW0}$ | $\overline{BW1}$ | D0–D8 | D9–D17 |
|---|---|---|---|
| 1 | 1 | Don't Care | Don't Care |
| 0 | 1 | Data In | Don't Care |
| 1 | 0 | Don't Care | Data In |
| 0 | 0 | Data In | Data In |

 © 2007, GSI Technology
Specifications cited are subject to change without notice. For latest documentation see http://www.gsitechnology.com.

## Absolute Maximum Ratings

(All voltages reference to $V_{SS}$)

| Symbol | Description | Value | Unit |
|---|---|---|---|
| $V_{DD}$ | Voltage on $V_{DD}$ Pins | –0.5 to 3.6 | V |
| $V_{DDQ}$ | Voltage in $V_{DDQ}$ Pins | –0.5 to 3.6 | V |
| $V_{REF}$ | Voltage in $V_{REF}$ Pins | –0.5 to $V_{DDQ}$ | V |
| $V_{I/O}$ | Voltage on I/O Pins | –0.5 to $V_{DDQ}$ +0.5 (≤ 3.6 V max.) | V |
| $V_{IN}$ | Voltage on Other Input Pins | –0.5 to $V_{DDQ}$ +0.5 (≤ 3.6 V max.) | V |
| $I_{IN}$ | Input Current on Any Pin | +/–100 | mA dc |
| $I_{OUT}$ | Output Current on Any I/O Pin | +/–100 | mA dc |
| $T_J$ | Maximum Junction Temperature | 125 | °C |
| $T_{STG}$ | Storage Temperature | –55 to 125 | °C |

**Note:**

Permanent damage to the device may occur if the Absolute Maximum Ratings are exceeded. Operation should be restricted to Recommended Operating Conditions. Exposure to conditions exceeding the Recommended Operating Conditions, for an extended period of time, may affect reliability of this component.

## Recommended Operating Conditions

## Power Supplies

| Parameter | Symbol | Min. | Typ. | Max. | Unit | Notes |
|---|---|---|---|---|---|---|
| Supply Voltage | $V_{DD}$ | 2.4 | 2.5 | 2.6 | V | |
| 1.8 V I/O Supply Voltage | $V_{DDQ}$ | 1.7 | 1.8 | 1.95 | V | 1 |
| 1.5 V I/O Supply Voltage | $V_{DDQ}$ | 1.4 | 1.5 | 1.6 | V | 1 |
| Ambient Temperature (Commercial Range Versions) | $T_A$ | 0 | 25 | 70 | °C | 2 |
| Ambient Temperature (Industrial Range Versions) | $T_A$ | –40 | 25 | 85 | °C | 2 |

Notes:

1. Unless otherwise noted, all performance specifications quoted are evaluated for worst case at both 1.4 V ≤ $V_{DDQ}$ ≤ 1.6 V (i.e., 1.5 V I/O) and 1.7 V ≤ $V_{DDQ}$ ≤ 1.95 V (i.e., 1.8 V I/O) and quoted at whichever condition is worst case.
2. The power supplies need to be powered up simultaneously or in the following sequence: $V_{DD}$, $V_{DDQ}$, $V_{REF}$, followed by signal inputs. The power down sequence must be the reverse. $V_{DDQ}$ must not exceed $V_{DD}$.
3. Most speed grades and configurations of this device are offered in both Commercial and Industrial Temperature ranges. The part number of Industrial Temperature Range versions end the character "I". Unless otherwise noted, all performance specifications quoted are evaluated for worst case in the temperature range marked on the device.

 © 2007, GSI Technology

Specifications cited are subject to change without notice. For latest documentation see http://www.gsitechnology.com.

## HSTL I/O DC Input Characteristics

| Parameter | Symbol | Min | Max | Units | Notes |
|---|---|---|---|---|---|
| DC Input Logic High | $V_{IH}$ (dc) | $V_{REF}$ + 200 | | mV | 1 |
| DC Input Logic Low | $V_{IL}$ (dc) | | $V_{REF}$ – 200 | mV | 1 |
| $V_{REF}$ DC Voltage | $V_{REF}$ (dc) | $V_{DDQ}$ (min)/2 | $V_{DDQ}$ (max)/2 | V | 1 |

Note:
Compatible with both 1.8 V and 1.5 V I/O drivers

## HSTL I/O AC Input Characteristics

| Parameter | Symbol | Min | Max | Units | Notes |
|---|---|---|---|---|---|
| AC Input Logic High | $V_{IH}$ (ac) | $V_{REF}$ + 400 | | mV | 3,4 |
| AC Input Logic Low | $V_{IL}$ (ac) | | $V_{REF}$ – 400 | mV | 3,4 |
| $V_{REF}$ Peak to Peak AC Voltage | $V_{REF}$ (ac) | | 5% $V_{REF}$ (DC) | mV | 1 |

Notes:
1. The peak to peak AC component superimposed on $V_{REF}$ may not exceed 5% of the DC component of $V_{REF}$.
2. To guarantee AC characteristics, $V_{IH}$,$V_{IL}$, Trise, and Tfall of inputs and clocks must be within 10% of each other.
3. For devices supplied with HSTL I/O input buffers. Compatible with both 1.8 V and 1.5 V I/O drivers.
4. See AC Input Definition drawing below.

### HSTL I/O AC Input Definitions

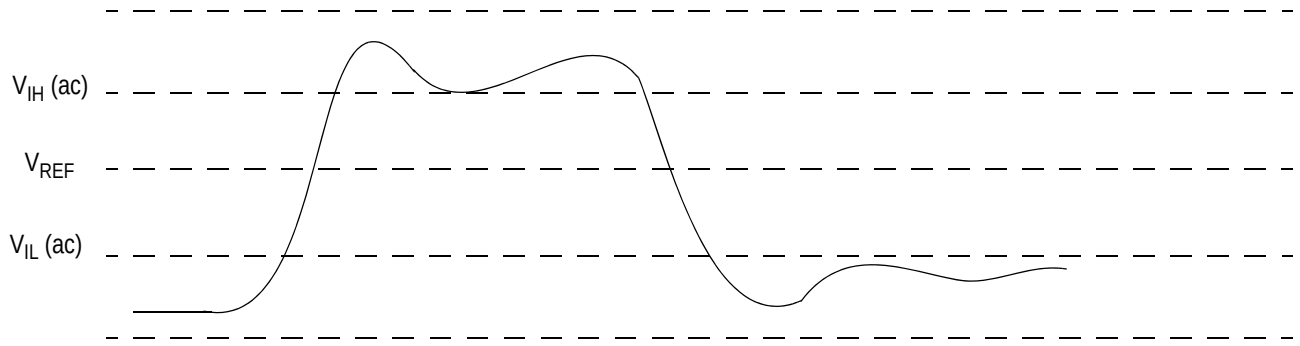


### Undershoot Measurement and Timing

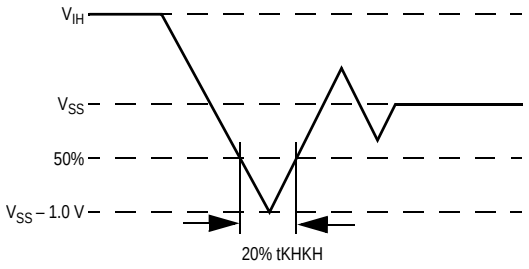


### Overshoot Measurement and Timing

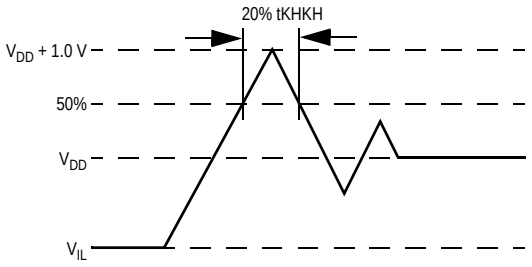


 © 2007, GSI Technology
Specifications cited are subject to change without notice. For latest documentation see http://www.gsitechnology.com.

## Capacitance

($T_A$ = 25°C, f = 1 MHz, $V_{DD}$ = 3.3 V)

| Parameter | Symbol | Test conditions | Typ. | Max. | Unit |
|---|---|---|---|---|---|
| Input Capacitance | $C_{IN}$ | $V_{IN}$ = 0 V | 4 | 5 | pF |
| Output Capacitance | $C_{OUT}$ | $V_{OUT}$ = 0 V | 6 | 7 | pF |

Note:
This parameter is sample tested.

## AC Test Conditions

| Parameter | Conditions |
|---|---|
| Input high level | $V_{DDQ}$ |
| Input low level | 0 V |
| Max. input slew rate | 2 V/ns |
| Input reference level | $V_{DDQ}/2$ |
| Output reference level | $V_{DDQ}/2$ |

Notes:
Test conditions as specified with output loading as shown unless otherwise noted.

### AC Test Load Diagram

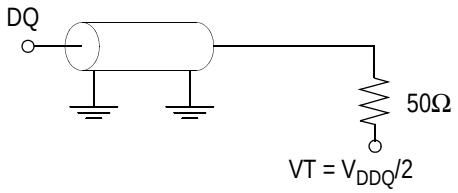


RQ = 250 Ω (HSTL I/O)
$V_{REF}$ = 0.75 V

## Input and Output Leakage Characteristics

| Parameter | Symbol | Test Conditions | Min. | Max | Notes |
|---|---|---|---|---|---|
| Input Leakage Current (except mode pins) | $I_{IL}$ | $V_{IN}$ = 0 to $V_{DD}$ | –2 uA | 2 uA | |
| Output Leakage Current | $I_{OL}$ | Output Disable, $V_{OUT}$ = 0 to $V_{DDQ}$ | –2 uA | 2 uA | |

 © 2007, GSI Technology
Specifications cited are subject to change without notice. For latest documentation see http://www.gsitechnology.com.

## Programmable Impedance HSTL Output Driver DC Electrical Characteristics

| Parameter | Symbol | Min. | Max. | Units | Notes |
|---|---|---|---|---|---|
| Output High Voltage | $V_{OH1}$ | $V_{DDQ}/2$ | $V_{DDQ}$ | V | 1, 3 |
| Output Low Voltage | $V_{OL1}$ | Vss | $V_{DDQ}/2$ | V | 2, 3 |
| Output High Voltage | $V_{OH2}$ | $V_{DDQ} – 0.2$ | $V_{DDQ}$ | V | 4, 5 |
| Output Low Voltage | $V_{OL2}$ | Vss | 0.2 | V | 4, 6 |

Notes:

1. $I_{OH} = (V_{DDQ}/2) / (RQ/5)$ +/– 15% @ $V_{OH} = V_{DDQ}/2$ (for: $175\Omega \leq RQ \leq 350\Omega$).
2. $I_{OL} = (V_{DDQ}/2) / (RQ/5)$ +/– 15% @ $V_{OL} = V_{DDQ}/2$ (for: $175\Omega \leq RQ \leq 350\Omega$).
3. Parameter tested with RQ = 250Ω and $V_{DDQ}$ = 1.5 V or 1.8 V
4. Minimum Impedance mode, ZQ = $V_{SS}$
5. $I_{OH}$ = –1.0 mA
6. $I_{OL}$ = 1.0 mA

 © 2007, GSI Technology
Specifications cited are subject to change without notice. For latest documentation see http://www.gsitechnology.com.

## Operating Currents

| Parameter | Symbol | Org. | -200 | | -167 | | Test Conditions |
|---|---|---|---|---|---|---|---|
| | | | 0°C to 70°C | –40°C to +85°C | 0°C to 70°C | –40°C to +85°C | |
| Operating Current | IDD | x18 | TBD | TBD | TBD | TBD | $\overline{R}$ and $\overline{W} \le V_{IL}$ Max.<br>tKHKH ≥ tKHKH Min.<br>All other inputs<br>$V_{IN} \le V_{IL}$ Max. or $V_{IN} \ge V_{IH}$ Min. |
| Operating Current | IDD | x36 | TBD | TBD | TBD | TBD | |
| Chip Disable Current | ISB1 | x18 | TBD | TBD | TBD | TBD | $\overline{R}$ and $\overline{W} \ge V_{IH}$ Min.<br>tKHKH ≥ tKHKH Min.<br>All other inputs<br>$V_{IN} \le V_{IL}$ Max. or $V_{IN} \ge V_{IH}$ Min. |
| Chip Disable Current | ISB1 | x36 | TBD | TBD | TBD | TBD | |

Note:
Power measured with output pins floating.

 © 2007, GSI Technology
Specifications cited are subject to change without notice. For latest documentation see http://www.gsitechnology.com.

## AC Electrical Characteristics

| Parameter | Symbol | -200 | | -167 | | Units | Notes |
|---|---|---|---|---|---|---|---|
| | | Min | Max | Min | Max | | |
| K, $\overline{K}$ Clock Cycle Time<br>C, $\overline{C}$ Clock Cycle Time | $t_{KHKH}$<br>$t_{CHCH}$ | 5.0 | — | 6.0 | — | ns | |
| K, $\overline{K}$ Clock High Pulse Width<br>C, $\overline{C}$ Clock High Pulse Width | $t_{KHKL}$<br>$t_{CHCL}$ | 2.0 | — | 2.4 | — | ns | |
| K, $\overline{K}$ Clock Low Pulse Width<br>C, $\overline{C}$ Clock Low Pulse Width | $t_{KLKH}$<br>$t_{CLCH}$ | 2.0 | — | 2.4 | — | ns | |
| K Clock High to $\overline{K}$ Clock High<br>C Clock High to $\overline{C}$ Clock High | $t_{KH\overline{K}H}$<br>$t_{CH\overline{C}H}$ | 2.2 | | 2.7 | — | ns | 4 |
| $\overline{K}$ Clock High to K Clock High<br>$\overline{C}$ Clock High to C Clock High | $t_{\overline{K}KHKH}$<br>$t_{\overline{C}CHCH}$ | 2.2 | | 2.7 | — | ns | |
| K, $\overline{K}$ Clock High to C, $\overline{C}$ Clock High | $t_{KHCH}$ | 0 | 1.7 | 0 | 2.0 | ns | |
| Address Input Setup Time | $t_{AVKH}$ | 0.6 | — | 0.7 | — | ns | |
| Address Input Hold Time | $t_{KHAX}$ | 0.6 | — | 0.7 | — | ns | |
| Control Input Setup Time | $t_{BVKH}$ | 0.6 | — | 0.7 | — | ns | 1 |
| Control Input Hold Time | $t_{KHBX}$ | 0.6 | — | 0.7 | — | ns | 1 |
| Data and Byte Write Input Setup Time | $t_{DVKH}$ | 0.6 | — | 0.7 | — | ns | |
| Data and Byte Write Input Hold Time | $t_{KHDX}$ | 0.6 | — | 0.7 | — | ns | |
| K, $\overline{K}$ Clock High to Data Output Valid<br>C, $\overline{C}$ Clock High to Data Output Valid | $t_{KHQV}$<br>$t_{CHQV}$ | — | 2.3 | — | 2.5 | ns | |
| K, $\overline{K}$ Clock High to Data Output Hold<br>C, $\overline{C}$ Clock High to Data Output Hold | $t_{KHQX}$<br>$t_{CHQX}$ | 1.2 | — | 1.2 | — | ns | 2 |
| K Clock High to Data Output Low-Z<br>C Clock High to Data Output Low-Z | $t_{KHQX1}$<br>$t_{CHQX1}$ | 1.2 | — | 1.2 | — | ns | 2,3 |
| K Clock High to Data Output High-Z<br>C Clock High to Data Output High-Z | $t_{KHQZ}$<br>$t_{CHQZ}$ | — | 2.3 | — | 2.5 | ns | 2,3 |

Notes:

1. These parameters apply to control inputs $\overline{R}$ and $\overline{W}$.
2. These parameters are guaranteed by design and characterization. Not 100% tested.
3. These parameters are measured at ±50mV from steady state voltage.
4. $t_{KH\overline{K}H}$ Max is specified by $t_{\overline{K}KHKH}$ Min. $t_{CH\overline{C}H}$ Max is specified by $t_{\overline{C}CHCH}$ Min.

 © 2007, GSI Technology

Specifications cited are subject to change without notice. For latest documentation see http://www.gsitechnology.com.

## K and $\overline{K}$ Controlled Read-Write-Read Timing Diagram

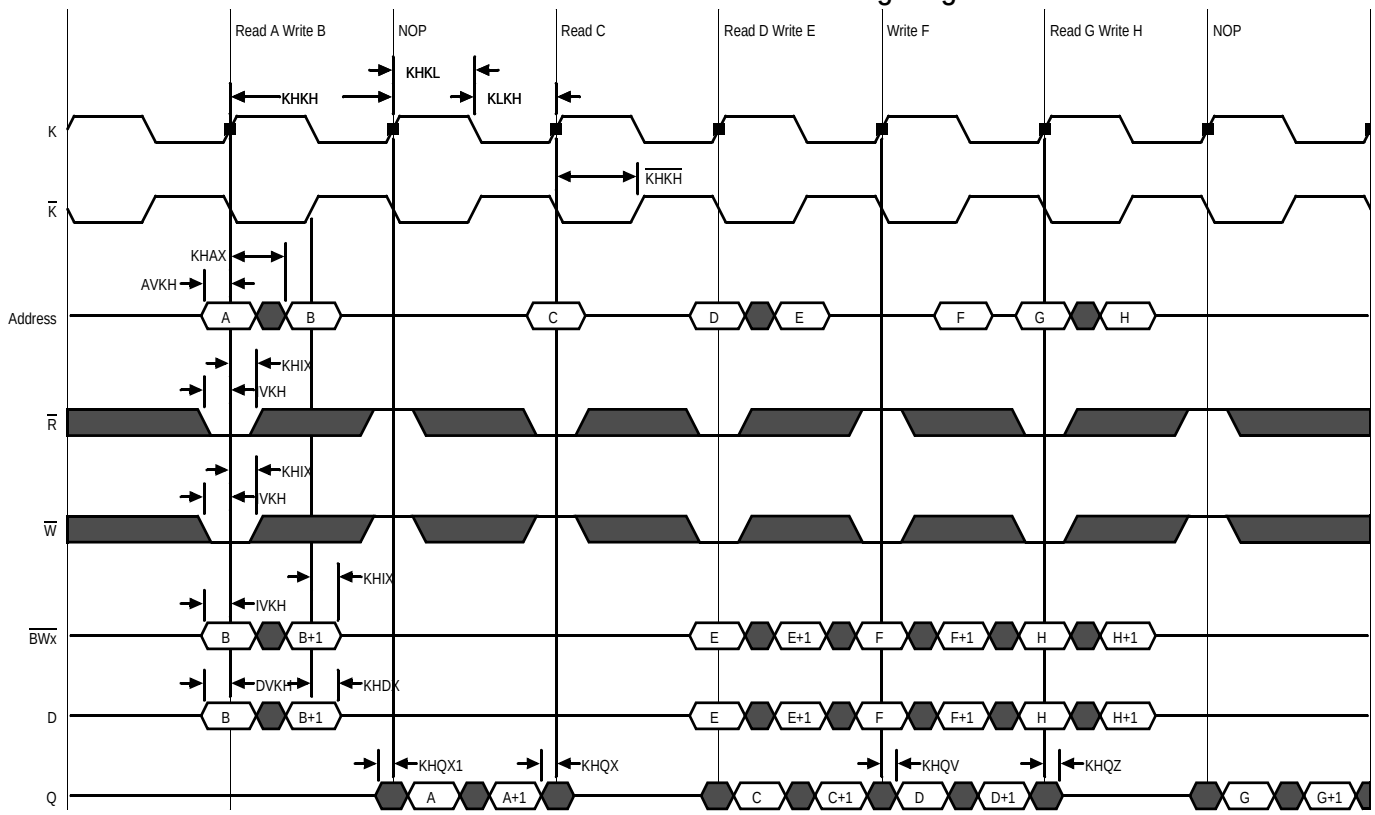


 © 2007, GSI Technology

Specifications cited are subject to change without notice. For latest documentation see http://www.gsitechnology.com.

## C and $\overline{C}$ Controlled Read-Write-Read Timing Diagram

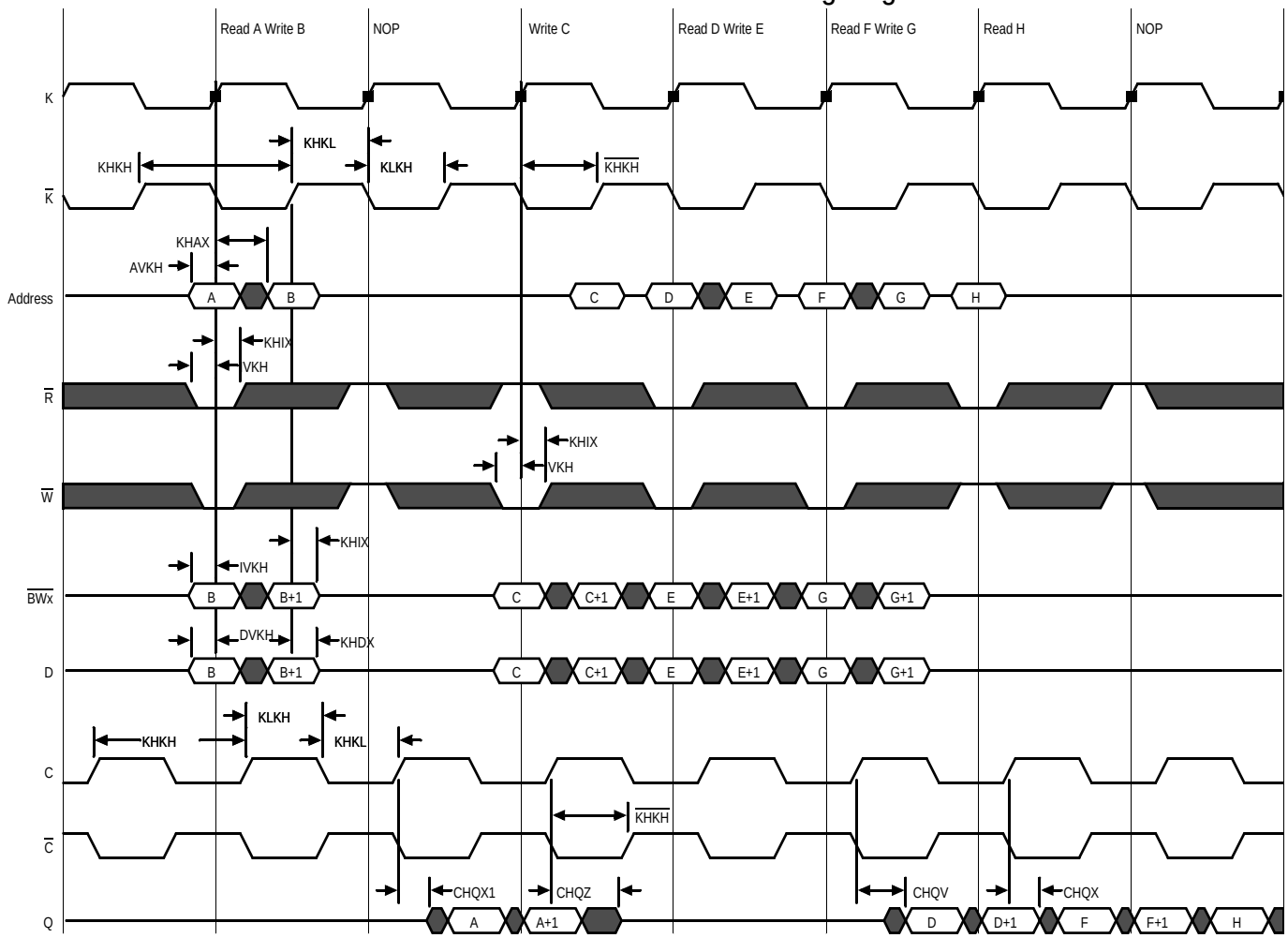


 © 2007, GSI Technology

Specifications cited are subject to change without notice. For latest documentation see http://www.gsitechnology.com.

## JTAG Port Operation

### Overview

The JTAG Port on this RAM operates in a manner that is compliant with IEEE Standard 1149.1-1990, a serial boundary scan interface standard (commonly referred to as JTAG). The JTAG Port input interface levels scale with $V_{DD}$. The JTAG output drivers are powered by $V_{DDQ}$.

### Disabling the JTAG Port

It is possible to use this device without utilizing the JTAG port. The port is reset at power-up and will remain inactive unless clocked. TCK, TDI, and TMS are designed with internal pull-up circuits.To assure normal operation of the RAM with the JTAG Port unused, TCK, TDI, and TMS may be left floating or tied to either $V_{DD}$ or $V_{SS}$. TDO should be left unconnected.

## JTAG Pin Descriptions

| Pin | Pin Name | I/O | Description |
|---|---|---|---|
| TCK | Test Clock | In | Clocks all TAP events. All inputs are captured on the rising edge of TCK and all outputs propagate from the falling edge of TCK. |
| TMS | Test Mode Select | In | The TMS input is sampled on the rising edge of TCK. This is the command input for the TAP controller state machine. An undriven TMS input will produce the same result as a logic one input level. |
| TDI | Test Data In | In | The TDI input is sampled on the rising edge of TCK. This is the input side of the serial registers placed between TDI and TDO. The register placed between TDI and TDO is determined by the state of the TAP Controller state machine and the instruction that is currently loaded in the TAP Instruction Register (refer to the TAP Controller State Diagram). An undriven TDI pin will produce the same result as a logic one input level. |
| TDO | Test Data Out | Out | Output that is active depending on the state of the TAP state machine. Output changes in response to the falling edge of TCK. This is the output side of the serial registers placed between TDI and TDO. |

Note:
This device does not have a TRST (TAP Reset) pin. TRST is optional in IEEE 1149.1. The Test-Logic-Reset state is entered while TMS is held high for five rising edges of TCK. The TAP Controller is also reset automaticly at power-up.

## JTAG Port Registers

### Overview

The various JTAG registers, refered to as Test Access Port orTAP Registers, are selected (one at a time) via the sequences of 1s and 0s applied to TMS as TCK is strobed. Each of the TAP Registers is a serial shift register that captures serial input data on the rising edge of TCK and pushes serial data out on the next falling edge of TCK. When a register is selected, it is placed between the TDI and TDO pins.

### Instruction Register

The Instruction Register holds the instructions that are executed by the TAP controller when it is moved into the Run, Test/Idle, or the various data register states. Instructions are 3 bits long. The Instruction Register can be loaded when it is placed between the TDI and TDO pins. The Instruction Register is automatically preloaded with the IDCODE instruction at power-up or whenever the controller is placed in Test-Logic-Reset state.

### Bypass Register

The Bypass Register is a single bit register that can be placed between TDI and TDO. It allows serial test data to be passed through the RAM's JTAG Port to another device in the scan chain with as little delay as possible.

### Boundary Scan Register

The Boundary Scan Register is a collection of flip flops that can be preset by the logic level found on the RAM's input or I/O pins. The flip flops are then daisy chained together so the levels found can be shifted serially out of the JTAG Port's TDO pin. The Boundary Scan Register also includes a number of place holder flip flops (always set to a logic 1). The relationship between the

 © 2007, GSI Technology
Specifications cited are subject to change without notice. For latest documentation see http://www.gsitechnology.com.

device pins and the bits in the Boundary Scan Register is described in the Scan Order Table following. The Boundary Scan Register, under the control of the TAP Controller, is loaded with the contents of the RAMs I/O ring when the controller is in Capture-DR state and then is placed between the TDI and TDO pins when the controller is moved to Shift-DR state. SAMPLE-Z, SAMPLE/PRELOAD and EXTEST instructions can be used to activate the Boundary Scan Register.

## JTAG TAP Block Diagram

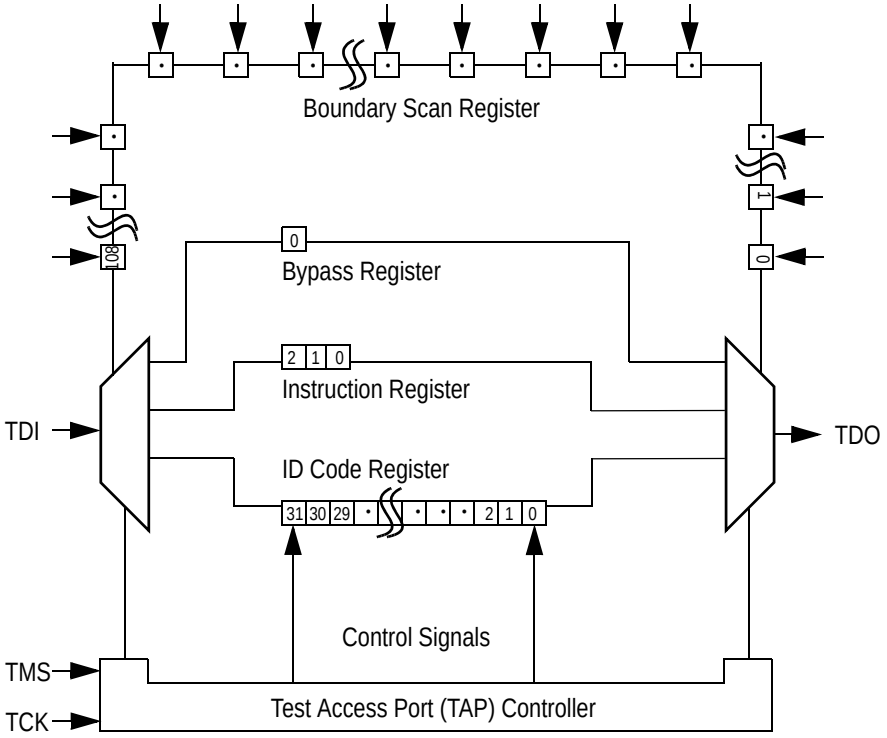


### Identification (ID) Register

The ID Register is a 32-bit register that is loaded with a device and vendor specific 32-bit code when the controller is put in Capture-DR state with the IDCODE command loaded in the Instruction Register. The code is loaded from a 32-bit on-chip ROM. It describes various attributes of the RAM as indicated below. The register is then placed between the TDI and TDO pins when the controller is moved into Shift-DR state. Bit 0 in the register is the LSB and the first to reach TDO when shifting begins.

## ID Register Contents

| | Not Used | | | | | | | | | | | | | | | | | | | | GSI Technology JEDEC Vendor ID Code | | | | | | | | | | | Presence Register |
|---|---|---|---|---|---|---|---|---|---|---|---|---|---|---|---|---|---|---|---|---|---|---|---|---|---|---|---|---|---|---|---|---|
| Bit # | 31 | 30 | 29 | 28 | 27 | 26 | 25 | 24 | 23 | 22 | 21 | 20 | 19 | 18 | 17 | 16 | 15 | 14 | 13 | 12 | 11 | 10 | 9 | 8 | 7 | 6 | 5 | 4 | 3 | 2 | 1 | 0 |
| | X | X | X | X | X | X | X | X | X | X | X | X | X | X | X | X | X | X | X | X | 0 | 0 | 0 | 1 | 1 | 0 | 1 | 1 | 0 | 0 | 1 | 1 |

 © 2007, GSI Technology
Specifications cited are subject to change without notice. For latest documentation see http://www.gsitechnology.com.

## Tap Controller Instruction Set

### Overview

There are two classes of instructions defined in the Standard 1149.1-1990; the standard (Public) instructions, and device specific (Private) instructions. Some Public instructions are mandatory for 1149.1 compliance. Optional Public instructions must be implemented in prescribed ways. The TAP on this device may be used to monitor all input and I/O pads, and can be used to load address, data or control signals into the RAM or to preload the I/O buffers.

When the TAP controller is placed in Capture-IR state the two least significant bits of the instruction register are loaded with 01. When the controller is moved to the Shift-IR state the Instruction Register is placed between TDI and TDO. In this state the desired instruction is serially loaded through the TDI input (while the previous contents are shifted out at TDO). For all instructions, the TAP executes newly loaded instructions only when the controller is moved to Update-IR state. The TAP instruction set for this device is listed in the following table.

JTAG Tap Controller State Diagram

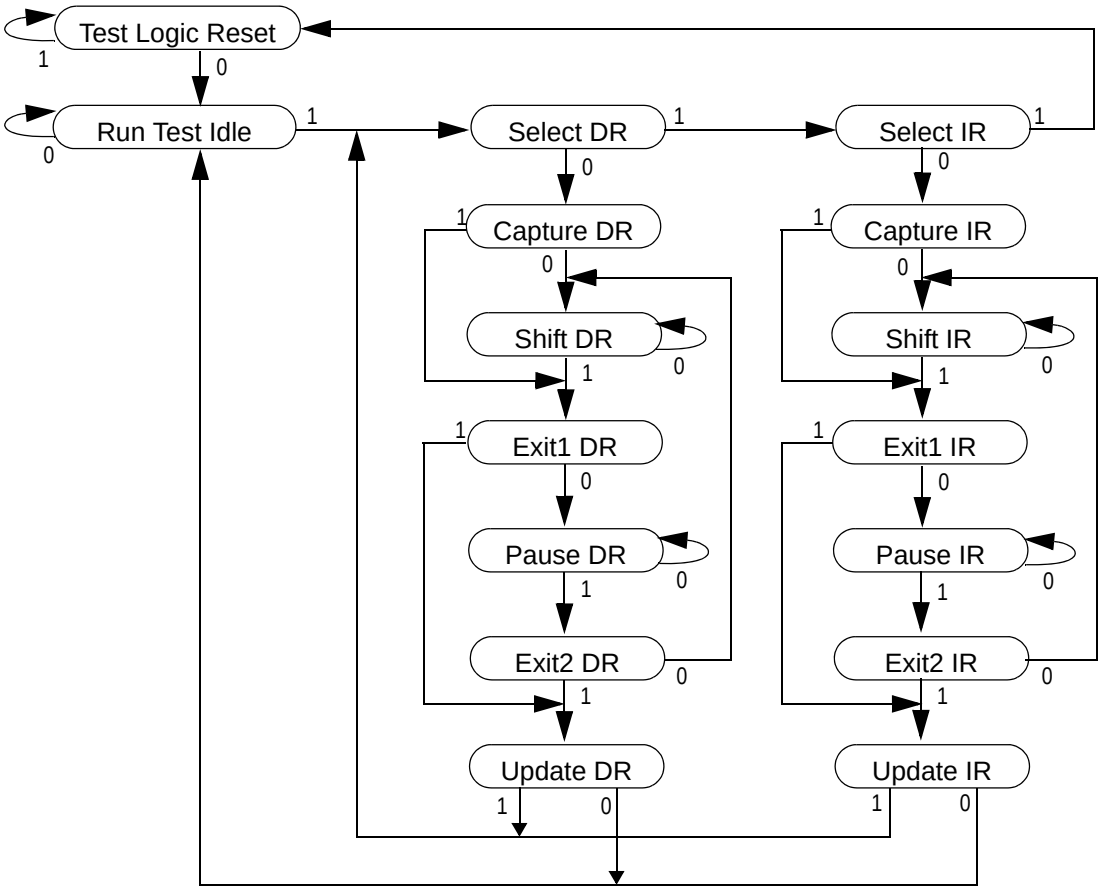


### Instruction Descriptions

#### BYPASS

When the BYPASS instruction is loaded in the Instruction Register the Bypass Register is placed between TDI and TDO. This occurs when the TAP controller is moved to the Shift-DR state. This allows the board level scan path to be shortened to facilitate testing of other devices in the scan path.

 © 2007, GSI Technology
Specifications cited are subject to change without notice. For latest documentation see http://www.gsitechnology.com.

### SAMPLE/PRELOAD

SAMPLE/PRELOAD is a Standard 1149.1 mandatory public instruction. When the SAMPLE / PRELOAD instruction is loaded in the Instruction Register, moving the TAP controller into the Capture-DR state loads the data in the RAMs input and I/O buffers into the Boundary Scan Register. Boundary Scan Register locations are not associated with an input or I/O pin, and are loaded with the default state identified in the Boundary Scan Chain table at the end of this section of the datasheet. Because the RAM clock is independent from the TAP Clock (TCK) it is possible for the TAP to attempt to capture the I/O ring contents while the input buffers are in transition (i.e. in a metastable state). Although allowing the TAP to sample metastable inputs will not harm the device, repeatable results cannot be expected. RAM input signals must be stabilized for long enough to meet the TAPs input data capture set-up plus hold time (tTS plus tTH). The RAMs clock inputs need not be paused for any other TAP operation except capturing the I/O ring contents into the Boundary Scan Register. Moving the controller to Shift-DR state then places the boundary scan register between the TDI and TDO pins.

### EXTEST

EXTEST is an IEEE 1149.1 mandatory public instruction. It is to be executed whenever the instruction register is loaded with all logic 0s. The EXTEST command does not block or override the RAM's input pins; therefore, the RAM's internal state is still determined by its input pins.

Typically, the Boundary Scan Register is loaded with the desired pattern of data with the SAMPLE/PRELOAD command. Then the EXTEST command is used to output the Boundary Scan Register's contents, in parallel, on the RAM's data output drivers on the falling edge of TCK when the controller is in the Update-IR state.

Alternately, the Boundary Scan Register may be loaded in parallel using the EXTEST command. When the EXTEST instruction is selected, the sate of all the RAM's input and I/O pins, as well as the default values at Scan Register locations not associated with a pin, are transferred in parallel into the Boundary Scan Register on the rising edge of TCK in the Capture-DR state, the RAM's output pins drive out the value of the Boundary Scan Register location with which each output pin is associated.

### IDCODE

The IDCODE instruction causes the ID ROM to be loaded into the ID register when the controller is in Capture-DR mode and places the ID register between the TDI and TDO pins in Shift-DR mode. The IDCODE instruction is the default instruction loaded in at power up and any time the controller is placed in the Test-Logic-Reset state.

### SAMPLE-Z

If the SAMPLE-Z instruction is loaded in the instruction register, all RAM outputs are forced to an inactive drive state (high-Z) and the Boundary Scan Register is connected between TDI and TDO when the TAP controller is moved to the Shift-DR state.

### RFU

These instructions are Reserved for Future Use. In this device they replicate the BYPASS instruction.

## JTAG TAP Instruction Set Summary

| Instruction | Code | Description | Notes |
|---|---|---|---|
| EXTEST | 000 | Places the Boundary Scan Register between TDI and TDO. | 1 |
| IDCODE | 001 | Preloads ID Register and places it between TDI and TDO. | 1, 2 |
| SAMPLE-Z | 010 | Captures I/O ring contents. Places the Boundary Scan Register between TDI and TDO.<br>Forces all RAM output drivers to High-Z. | 1 |
| RFU | 011 | Do not use this instruction; Reserved for Future Use.<br>Replicates BYPASS instruction. Places Bypass Register between TDI and TDO. | 1 |

 © 2007, GSI Technology
Specifications cited are subject to change without notice. For latest documentation see http://www.gsitechnology.com.

## JTAG TAP Instruction Set Summary

| | | | |
|---|---|---|---|
| SAMPLE/ PRELOAD | 100 | Captures I/O ring contents. Places the Boundary Scan Register between TDI and TDO. | 1 |
| GSI | 101 | GSI private instruction. | 1 |
| RFU | 110 | Do not use this instruction; Reserved for Future Use.<br>Replicates BYPASS instruction. Places Bypass Register between TDI and TDO. | 1 |
| BYPASS | 111 | Places Bypass Register between TDI and TDO. | 1 |

Notes:
1. Instruction codes expressed in binary, MSB on left, LSB on right.
2. Default instruction automatically loaded at power-up and in test-logic-reset state.

## JTAG Port Recommended Operating Conditions and DC Characteristics

| Parameter | Symbol | Min. | Max. | Unit | Notes |
|---|---|---|---|---|---|
| Test Port Input Low Voltage | $V_{ILJ}$ | –0.3 | 0.3 * $V_{DD}$ | V | 1 |
| Test Port Input High Voltage | $V_{IHJ}$ | 0.6 * $V_{DD}$ | $V_{DD}$ +0.3 | V | 1 |
| TMS, TCK and TDI Input Leakage Current | $I_{INHJ}$ | –300 | 1 | uA | 2 |
| TMS, TCK and TDI Input Leakage Current | $I_{INLJ}$ | –1 | 100 | uA | 3 |
| TDO Output Leakage Current | $I_{OLJ}$ | –1 | 1 | uA | 4 |
| Test Port Output High Voltage | $V_{OHJ}$ | 1.7 | — | V | 5, 6 |
| Test Port Output Low Voltage | $V_{OLJ}$ | — | 0.4 | V | 5, 7 |
| Test Port Output CMOS High | $V_{OHJC}$ | $V_{DD}$ – 100 mV | — | V | 5, 8 |
| Test Port Output CMOS Low | $V_{OLJC}$ | — | 100 mV | V | 5, 9 |

Notes:
1. Input Under/overshoot voltage must be –1 V < Vi < $V_{DDn}$ +1 V not to exceed 3.6 V maximum, with a pulse width not to exceed 20% tTKC.
2. $V_{ILJ} \leq V_{IN} \leq V_{DDn}$
3. $0\ V \leq V_{IN} \leq V_{ILJn}$
4. Output Disable, $V_{OUT}$ = 0 to $V_{DDn}$
5. The TDO output driver is served by the $V_{DD}$ supply.
6. $I_{OHJ}$ = –4 mA
7. $I_{OLJ}$ = + 4 mA
8. $I_{OHJC}$ = –100 uA
9. $I_{OLJC}$ = +100 uA

 © 2007, GSI Technology
Specifications cited are subject to change without notice. For latest documentation see http://www.gsitechnology.com.

## JTAG Port AC Test Conditions

| Parameter | Conditions |
|---|---|
| Input high level | $V_{DD}$ – 0.2 V |
| Input low level | 0.2 V |
| Input slew rate | 1 V/ns |
| Input reference level | $V_{DD}2$ |
| Output reference level | $V_{DD}/2$ |

JTAG Port AC Test Load

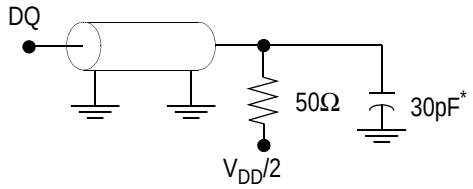


* Distributed Test Jig Capacitance

Notes:
1. Include scope and jig capacitance.
2. Test conditions as shown unless otherwise noted.

JTAG Port Timing Diagram

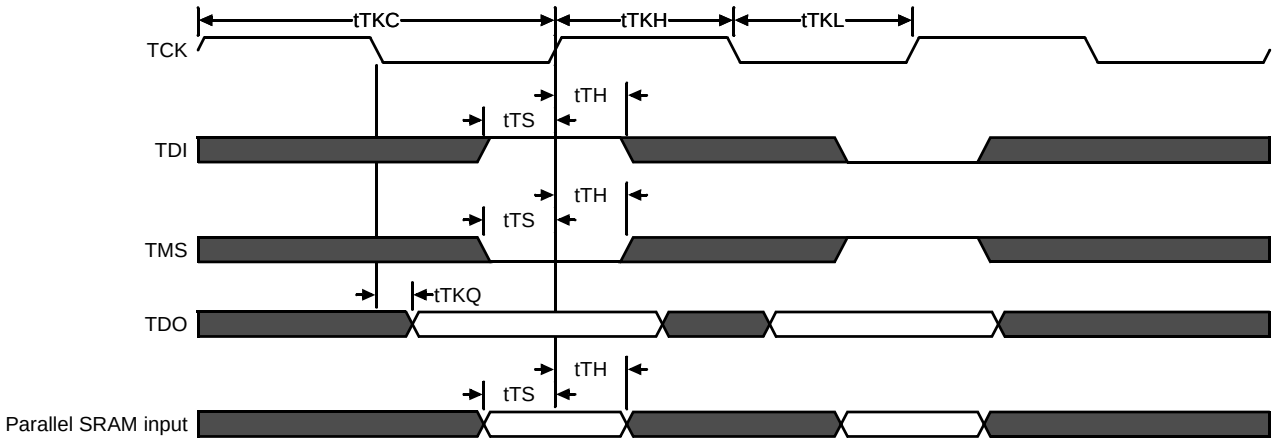


## JTAG Port AC Electrical Characteristics

| Parameter | Symbol | Min | Max | Unit |
|---|---|---|---|---|
| TCK Cycle Time | tTKC | 50 | — | ns |
| TCK Low to TDO Valid | tTKQ | — | 20 | ns |
| TCK High Pulse Width | tTKH | 20 | — | ns |
| TCK Low Pulse Width | tTKL | 20 | — | ns |
| TDI & TMS Set Up Time | tTS | 10 | — | ns |
| TDI & TMS Hold Time | tTH | 10 | — | ns |

 © 2007, GSI Technology
Specifications cited are subject to change without notice. For latest documentation see http://www.gsitechnology.com.

## Package Dimensions—165-Bump FPBGA (Package D)

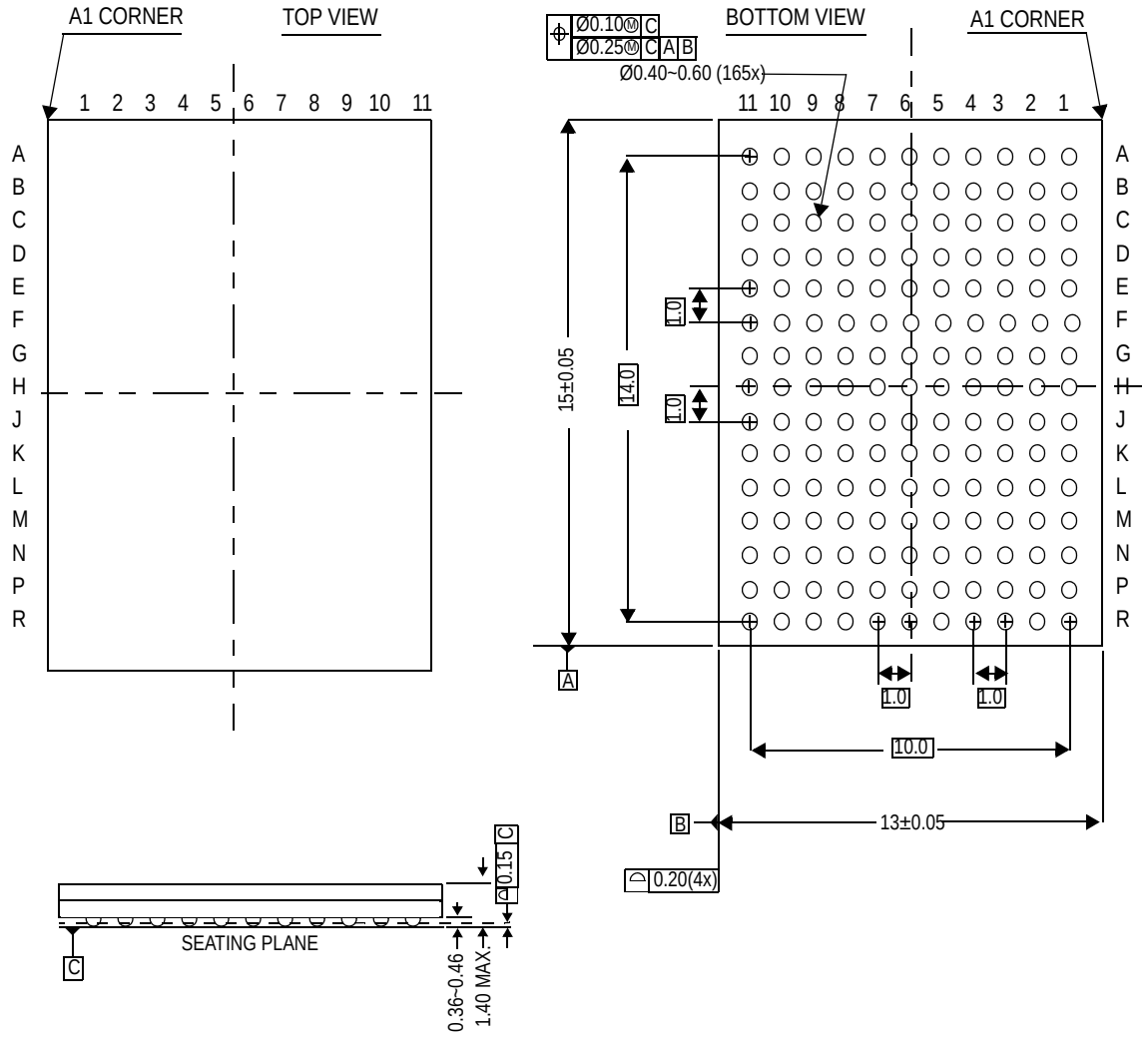


 © 2007, GSI Technology

Specifications cited are subject to change without notice. For latest documentation see http://www.gsitechnology.com.

## Ordering Information—GSI SigmaQuad SRAM

| Org | Part Number[1] | Type | Package | Speed (MHz) | $T_A$[2] |
|---|---|---|---|---|---|
| 1M x 18 | GS8180QV18BD-200 | SigmaQuad SRAM | 165-Pin BGA | 200 | C |
| 1M x 18 | GS8180QV18BD-167 | SigmaQuad SRAM | 165-Pin BGA | 167 | C |
| 512K x 36 | GS8180QV36BD-200 | SigmaQuad SRAM | 165-Pin BGA | 200 | C |
| 512K x 36 | GS8180QV36BD-167 | SigmaQuad SRAM | 165-Pin BGA | 167 | C |
| 1M x 18 | GS8180QV18BD-200I | SigmaQuad SRAM | 165-Pin BGA | 200 | I |
| 1M x 18 | GS8180QV18BD-167I | SigmaQuad SRAM | 165-Pin BGA | 167 | I |
| 512K x 36 | GS8180QV36BD-200I | SigmaQuad SRAM | 165-Pin BGA | 200 | I |
| 512K x 36 | GS8180QV36BD-167I | SigmaQuad SRAM | 165-Pin BGA | 167 | I |
| 1M x 18 | GS8180QV18BGD-200 | SigmaQuad SRAM | RoHS-compliant 165-Pin BGA | 200 | C |
| 1M x 18 | GS8180QV18BGD-167 | SigmaQuad SRAM | RoHS-compliant 165-Pin BGA | 167 | C |
| 512K x 36 | GS8180QV36BGD-200 | SigmaQuad SRAM | RoHS-compliant 165-Pin BGA | 200 | C |
| 512K x 36 | GS8180QV36BGD-167 | SigmaQuad SRAM | RoHS-compliant 165-Pin BGA | 167 | C |
| 1M x 18 | GS8180QV18BGD-200I | SigmaQuad SRAM | RoHS-compliant 165-Pin BGA | 200 | I |
| 1M x 18 | GS8180QV18BGD-167I | SigmaQuad SRAM | RoHS-compliant 165-Pin BGA | 167 | I |
| 512K x 36 | GS8180QV36BGD-200I | SigmaQuad SRAM | RoHS-compliant 165-Pin BGA | 200 | I |
| 512K x 36 | GS8180QV36BGD-167I | SigmaQuad SRAM | RoHS-compliant 165-Pin BGA | 167 | I |

Notes:

1. Customers requiring delivery in Tape and Reel should add the character “T” to the end of the part number. Example: GS8180QV18BD-200T.
2. C = Commercial Temperature Range. I = Industrial Temperature Range.

 © 2007, GSI Technology

Specifications cited are subject to change without notice. For latest documentation see http://www.gsitechnology.com.

## 18Mb SigmaQuad SRAM Data Sheet Revision History

| DS/DateRev. Code: Old; New | Types of Changes Format or Content | Page;Revisions;Reason |
|---|---|---|
| 8180QVxxBD_r1 | | • Creation of new datasheet |
| 8180QVxxBD_r1; 8180QVxxBD_r1.01 | Content | • Removed 300 MHz speed bin<br>• Rev1.01a: updated coplanarity for 165 BGA mechanical |
| 8180QVxxBD_r1.01; 8180QVxxBD_r1.02 | Content | • Changed $V_{DDQ}$ to $V_{DD}$ in JTAG Port Recommended Operating Conditions and DC Characteristics (pg. 26)<br>• (Rev1.02a: removed CQ reference from SAMPLE-Z section in JTAG Tap Instruction Set Summary)<br>• (Rev1.02b: Editorial updates) |

 © 2007, GSI Technology
Specifications cited are subject to change without notice. For latest documentation see http://www.gsitechnology.com.