DATE	DESCRIPTION	REV.
7.19.04	ECN 04–050 REDRAWN IN CAD	A
5.11.16	CHANGE AS PER ECN 16–055 B1 WAS 1.350, B2 WAS 337±.015	B

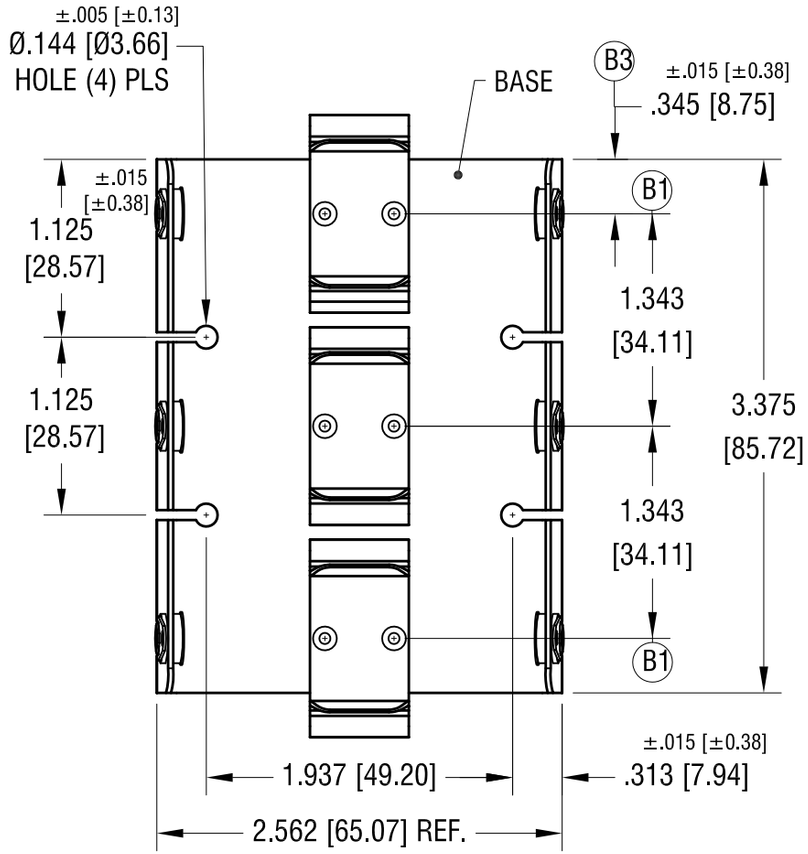

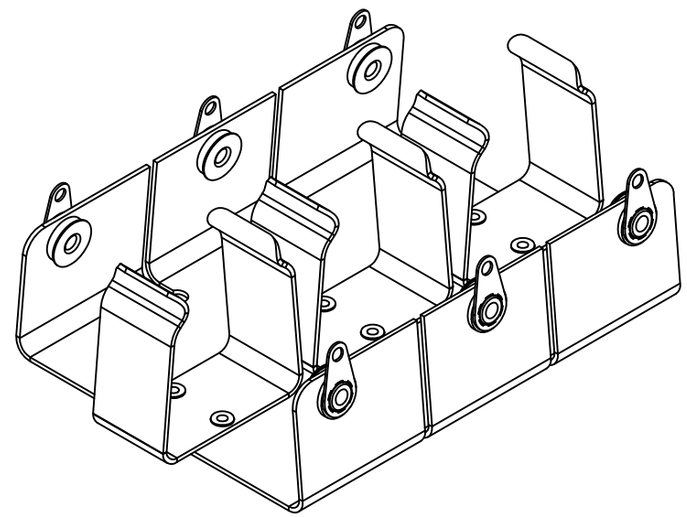

NOTE:
1. BASE: MAT'L- .032 [0.81] TH'K ALUMINUM
2. CLIP: MAT'L- .032 [0.81] TH'K ALUMINUM
3. SOLDER LUG: MAT'L- BRASS
FINISH: TIN PLATE

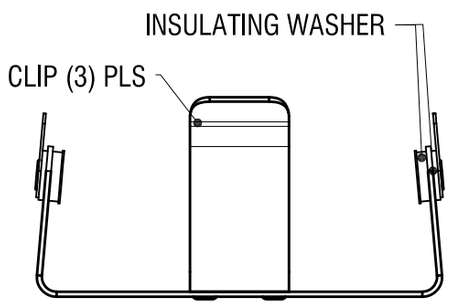

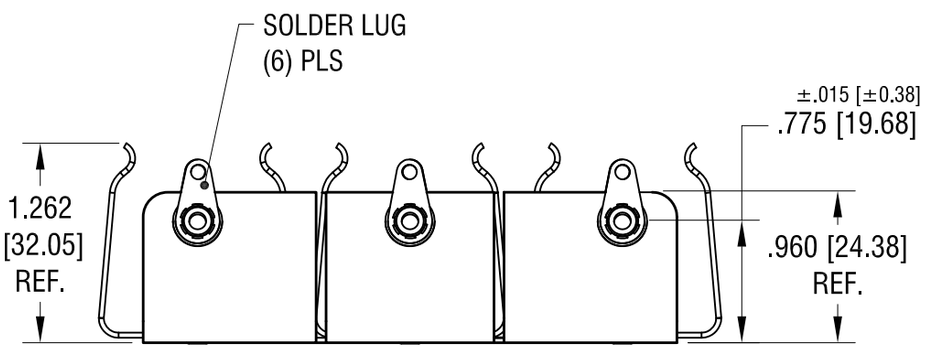

THIS DOCUMENT IS THE PROPERTY OF KEYSTONE ELECTRONICS CORP. AND SHALL NOT BE REPRODUCED, DISTRIBUTED OR USED AS A BASIS FOR MANUFACTURE WITHOUT PRIOR WRITTEN PERMISSION FROM KEYSTONE ELECTRONICS CORP.

KEYSTONE ELECTRONICS CORP.

www.keyelco.com • ASTORIA, N.Y. 11105-2017 • Tel (718) 956-8900

PART NAME	BATTERY HOLDER, (3) 'D' CELLS		
MATERIAL	AS NOTED		
FINISH	AS NOTED	DRN BY BOONE	DATE 12.28.81
		APP'D LN	SCALE .9X
TOLERANCES INCH [MM] DECIMAL ± .010 [± 0.25] ANGULAR ± 1° UNLESS OTHERWISE SPECIFIED	CODE C	DWG NO. 190	