PRODUCT NUMBER
SEE SHEET 3

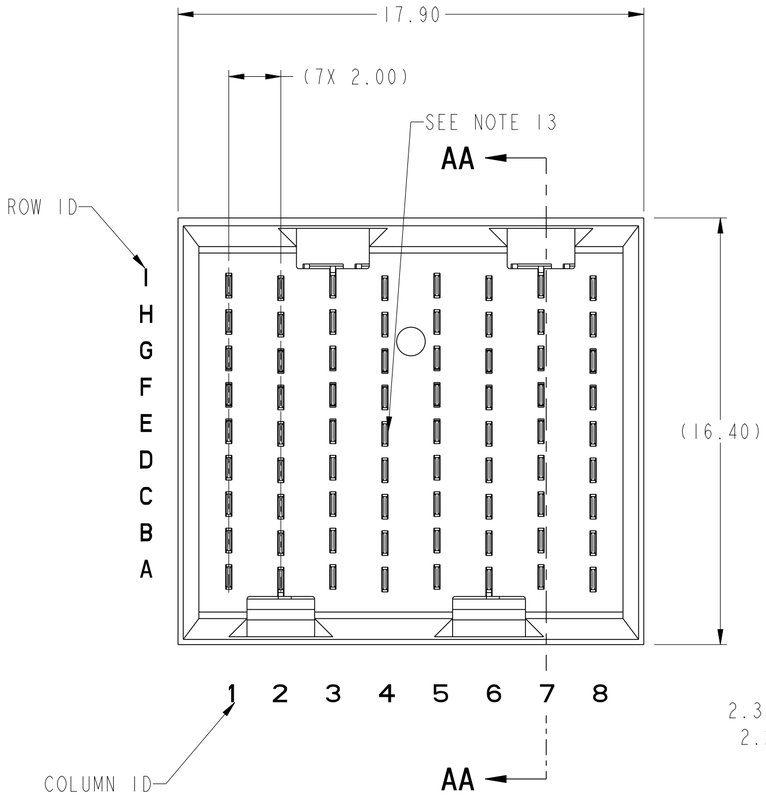


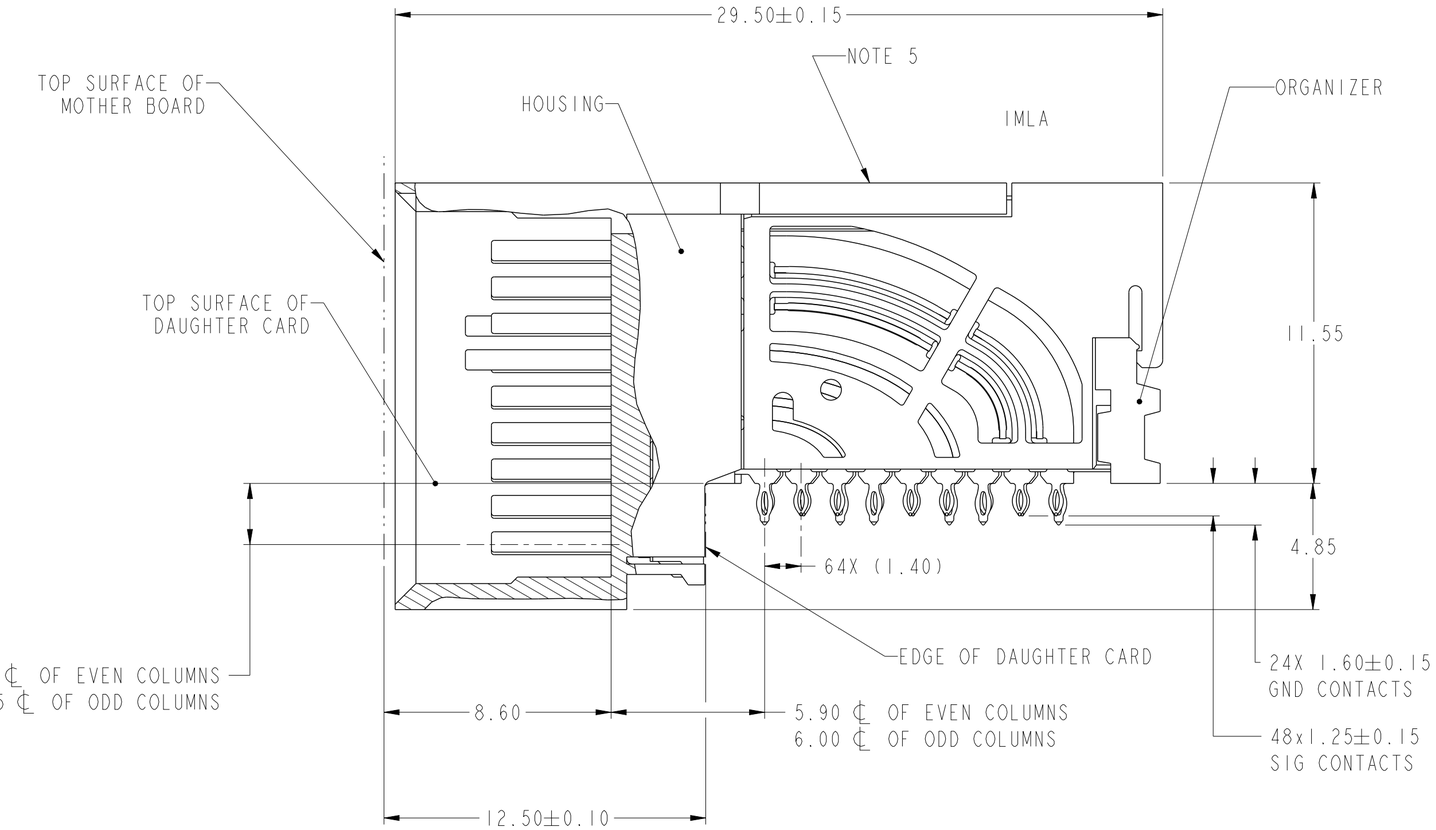


SECTION AA-AA

| | | | | | | | | | |
|---|---|---|---|---|---|---|---|---|---|
| spec ref | --- | | | dr | Lin-Soe Ngwe | 2013/03/20 | projection | MM | size A2 / scale 6:1 |
| tolerance std ASME Y14.5M | TOLERANCES UNLESS OTHERWISE SPECIFIED | | | eng | Art Lin | 2016/11/15 | | | |
| | | | | chr | Heaven Cen | 2016/11/17 | | | ecn no ELX-DG-25255-1 |
| | | | | appr | Pei-Ming Zheng | 2016/11/18 | product family | AirMax VSE | rel level Released |
| surface - | linear | 0.X | ±.3 | Amphenol FCi | title | AirMax VS2 R.A. HEADER | dwg no | 10124755 | rev E |
| | | 0.XX | ±.15 | | | 3 Pair, 72 pos, 2mm, 8Col, Small Press Fit | | | |
| | | 0.XXX | ±.050 | | | | | | |
| | angular | 0° | ±2° | www.fci.com | cat. no. | - | Product - Customer Drw | | sheet 1 of 3 |

© 2016 AFCI

Amphenol FCi

Creo File - REV E - 2016-02-12

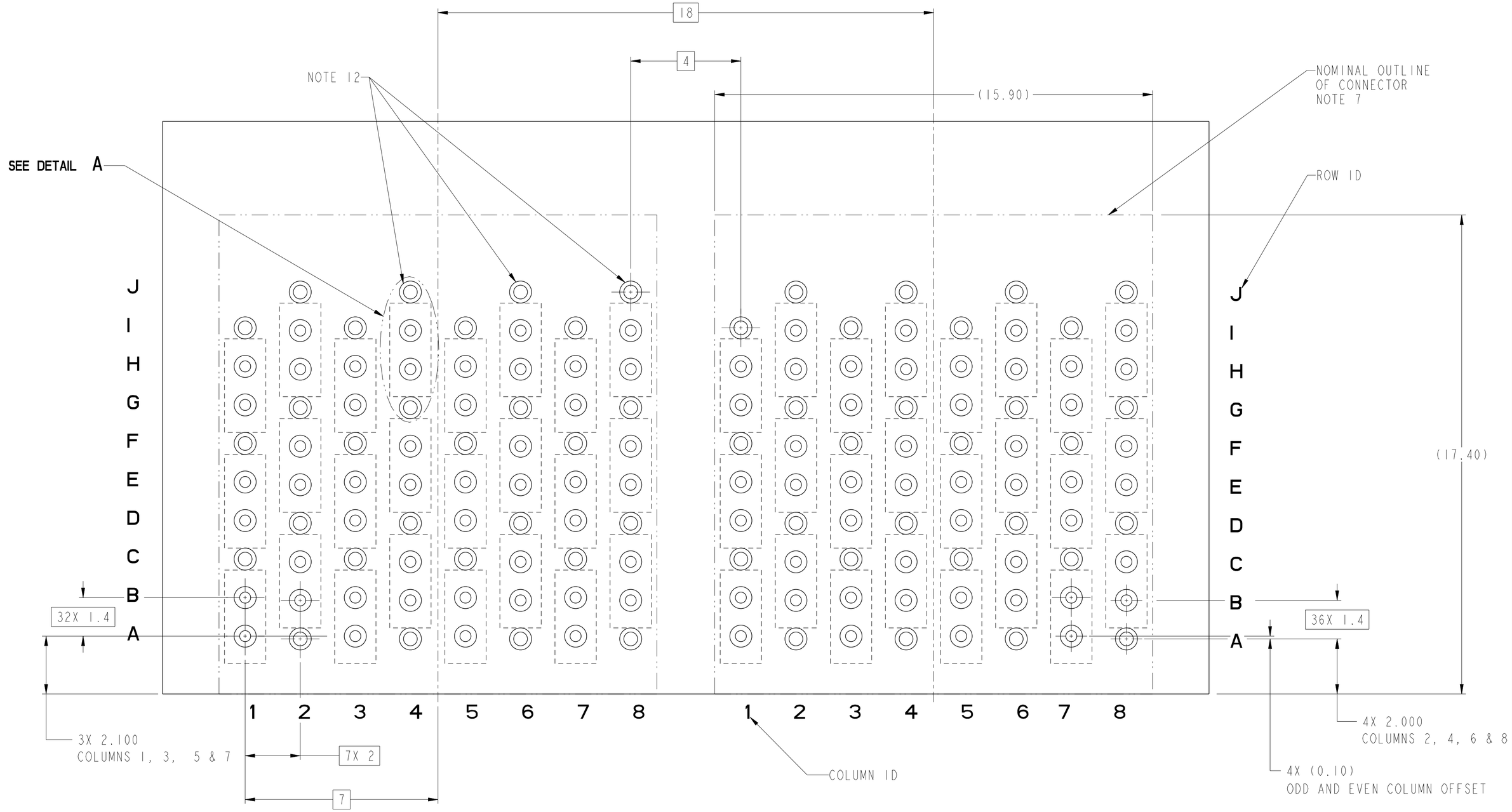


RECOMMENDED PCB LAYOUT
FOR DIFFERENTIAL APPLICATIONS
COMPONENT SIDE
(TWO ADJACENT FOOTPRINTS SHOWN)
NOTES 8 & 12

SCALE 10:1

| | | | | | | | | |
|---|---|---|---|---|---|---|---|---|
| spec ref | --- | | dr | Lin-Soe Ngwe | 2013/03/20 | projection | MM | size A2 / scale 8:1 |
| tolerance std ASME Y14.5M | TOLERANCES UNLESS OTHERWISE SPECIFIED | | eng | Art Lin | 2016/11/15 | | | ecn no ELX-DG-25255-1 |
| | | | chr | Heaven Cen | 2016/11/17 | | | |
| | | | appr | Pei-Ming Zheng | 2016/11/18 | product family | AirMax VSE | rel level Released |
| surface - | linear | 0.X | ±.3 | title | AirMax VS2 R.A. HEADER | dwg no | 10124755 | rev E |
| | | 0.XX | ±.15 | | 3 Pair, 72 pos, 2mm, 8Col, Small Press Fit | | | |
| | | 0.XXX | ±.050 | | | | | |
| | angular | 0° | ±2° | www.fci.com | cat. no. - | Product - Customer Drw | | sheet 2 of 3 |

Amphenol FCi
© 2016 AFCI

| PRODUCT NUMBER | PRESS-FIT TAIL PLATING TYPE | SHORT DETECT CONTACT | REMARK |
|---|---|---|---|
| 10124755-101 | TIN/LEAD ALLOY OVER NICKEL | NO | ONE SIDE PLATING (CUSTOMER SPECIAL) |
| 10124755-101LF | TIN OVER NICKEL (LEAD FREE) | | |
| 10124755-111 | TIN/LEAD ALLOY OVER NICKEL | YES (SEE NOTE 13) | |
| 10124755-111LF | TIN OVER NICKEL (LEAD FREE) | | |
| 10124755-102 | TIN/LEAD ALLOY OVER NICKEL | NO | TWO SIDE PLATING |
| 10124755-102LF | TIN OVER NICKEL (LEAD FREE) | | |
| 10124755-112 | TIN/LEAD ALLOY OVER NICKEL | YES (SEE NOTE 13) | |
| 10124755-112LF | TIN OVER NICKEL (LEAD FREE) | | |

1 - CONNECTOR MATERIALS:
HOUSING: HIGH TEMP THERMOPLASTIC, NATURAL, UL94-V0
IMLA PLASTIC: HIGH TEMP THERMOPLASTIC, BLACK, UL94-V0
CONTACT: COPPER ALLOY
ORGANIZER: HIGH TEMP THERMOPLASTIC, NATURAL, UL94-V0

2 - CONTACT PLATING:
SEPARABLE INTERFACE:
GXT PLUS PLATING, QUALIFIED TO MEET THE
REQUIREMENTS OF FCI PRODUCT SPECIFICATION GS-12-0956
INCLUDING TELCORDIA GR-1217-CORE (NOVEMBER 1995)
CENTRAL OFFICE TEST SEQUENCE

PRESS-FIT TAILS: SEE TABLE

3 - PRODUCT SPECIFICATION: GS-12-0956

4 - APPLICATION SPECIFICATION: GS-20-0305

5 - PRODUCT MARKING, (PROTOTYPE, PART NUMBER & LOT CODE), ON THIS SURFACE.

6 - POSITIONS "F" OF ODD NUMBERED COLUMNS
AND POSITIONS "G" OF EVEN NUMBERED COLUMNS
CORRESPOND TO EARLY MATE HEADER PINS.

7 - CONNECTOR OUTLINE MAY BE SCREEN PRINTED ONTO CUSTOMER PCB TO
BE USED AS A GUIDE FOR CONNECTOR PLACEMENT.

8 - REFER TO CUSTOMER DRAWING 10104444 FOR INFORMATION
ON PCB HOLE DIAMETERS AND PLATING OPTIONS

9 - LEAD FREE PRODUCT MEETS THE EUROPEAN UNION DIRECTIVES &
OTHER COUNTRY REGULATIONS AS DESCRIBED IN GS-22-008

10 - PACKAGING MEETS GS-14-920 LEAD FREE LABELING
SPECIFICATION.

11 - GROUND CONTACTS (C, F, & I IN ODD COLUMNS AND
A, D, & G IN EVEN COLUMNS) REQUIRE (∅0.50) FINISHED HOLES.
SIGNAL LOCATIONS REQUIRE (∅0.40) FINISHED HOLES

12 - THESE OUTER VIAS (J) ARE OPTIONAL. WHILE NO CONNECTOR EONS ARE
PRESSED INTO THESE HOLES WE RECCOMMEND (∅0.500) FINISHED HOLES
AT THESE LOCATIONS TO PROVIDE GROUND SYMMETRY THROUGH THE PCB.

13 - MATING PIN E4 HAS 0.5mm LESS NOMINAL WIPE THAN THE SHORTEST PIN.

14 - A △ SYMBOL WILL BE NEXT TO ANY DIMENSION, VIEW, OR NOTE, WHICH
HAS BEEN MODIFIED WITH THE CURRENT DRAWING REVISION

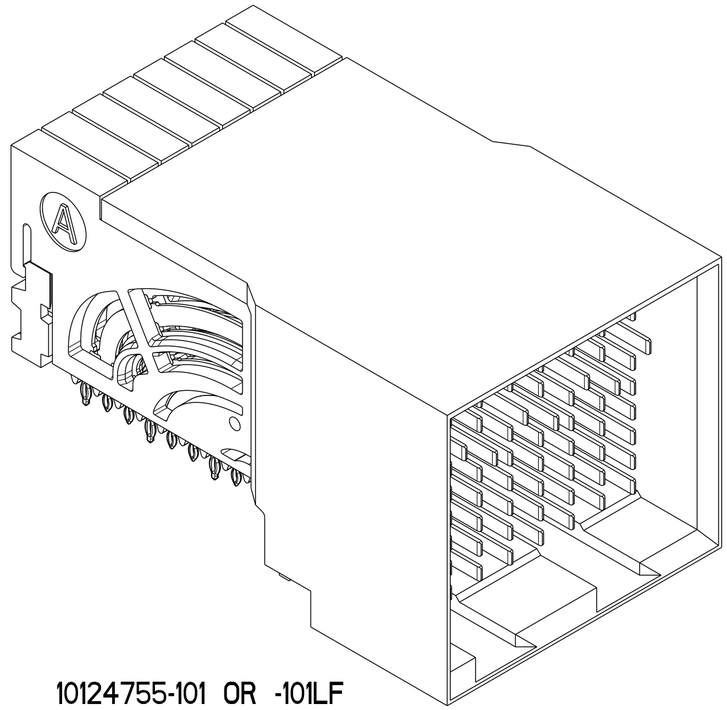

10124755-101 OR -101LF

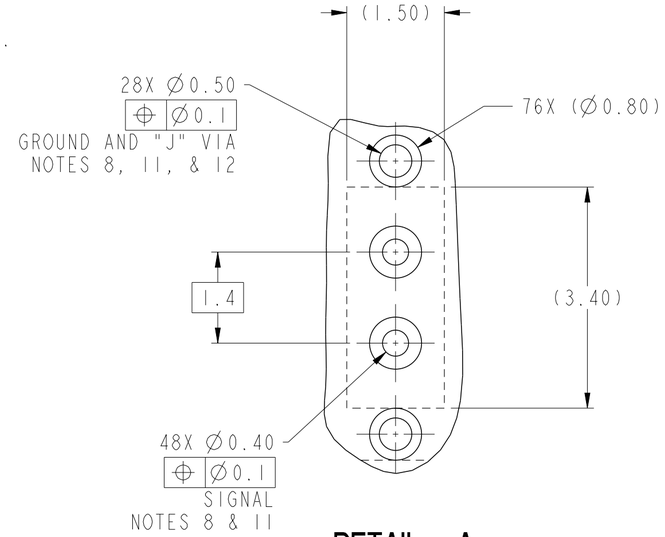


DETAIL A
SCALE 15:1

| | | | | | | | |
|---|---|---|---|---|---|---|---|
| spec ref | --- | dr | Lin-Soe Ngwe | 2013/03/20 | projection | MM | size A2 / scale 5:1 |
| tolerance std ASME Y14.5M | TOLERANCES UNLESS OTHERWISE SPECIFIED | eng | Art Lin | 2016/11/15 | | | |
| | | chr | Heaven Cen | 2016/11/17 | | | ecn no ELX-DG-25255-1 |
| | | appr | Pei-Ming Zheng | 2016/11/18 | product family | AirMax VSE | rel level Released |
| surface | linear 0.X ±.3; 0.XX ±.15; 0.XXX ±.050; angular 0° ±2° | Amphenol FCi | title | AirMax VS2 R.A. HEADER, 3 Pair, 72 pos, 2mm, 8Col, Small Press Fit | dwg no | 10124755 | rev E |
| | | www.fci.com | cat. no. | - | Product - Customer Drw | | sheet 3 of 3 |

© 2016 AFCI

Creo File - REV E - 2016-02-12