PRODUCT NUMBER
SEE SHEET 3

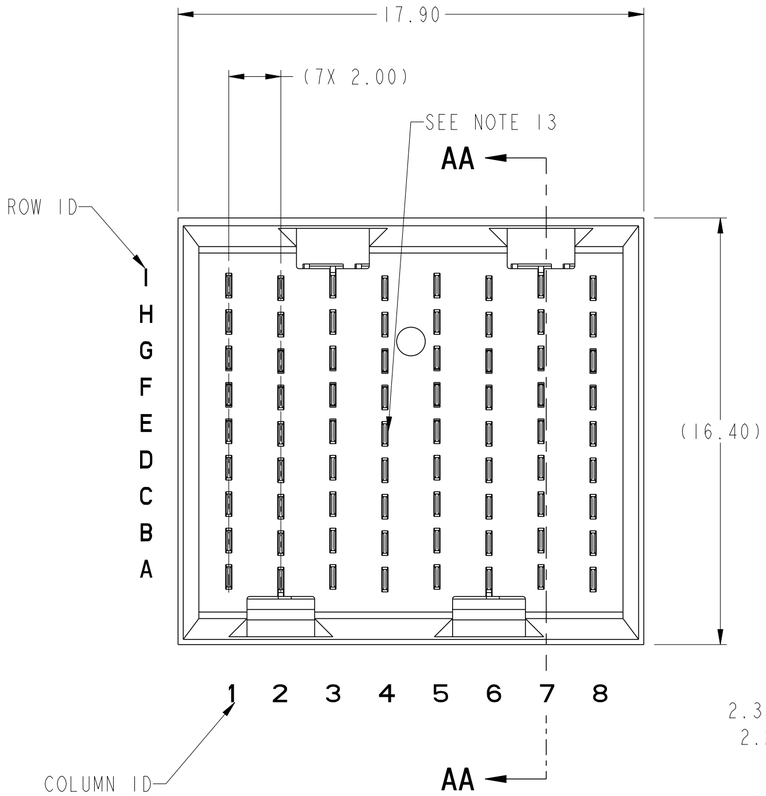

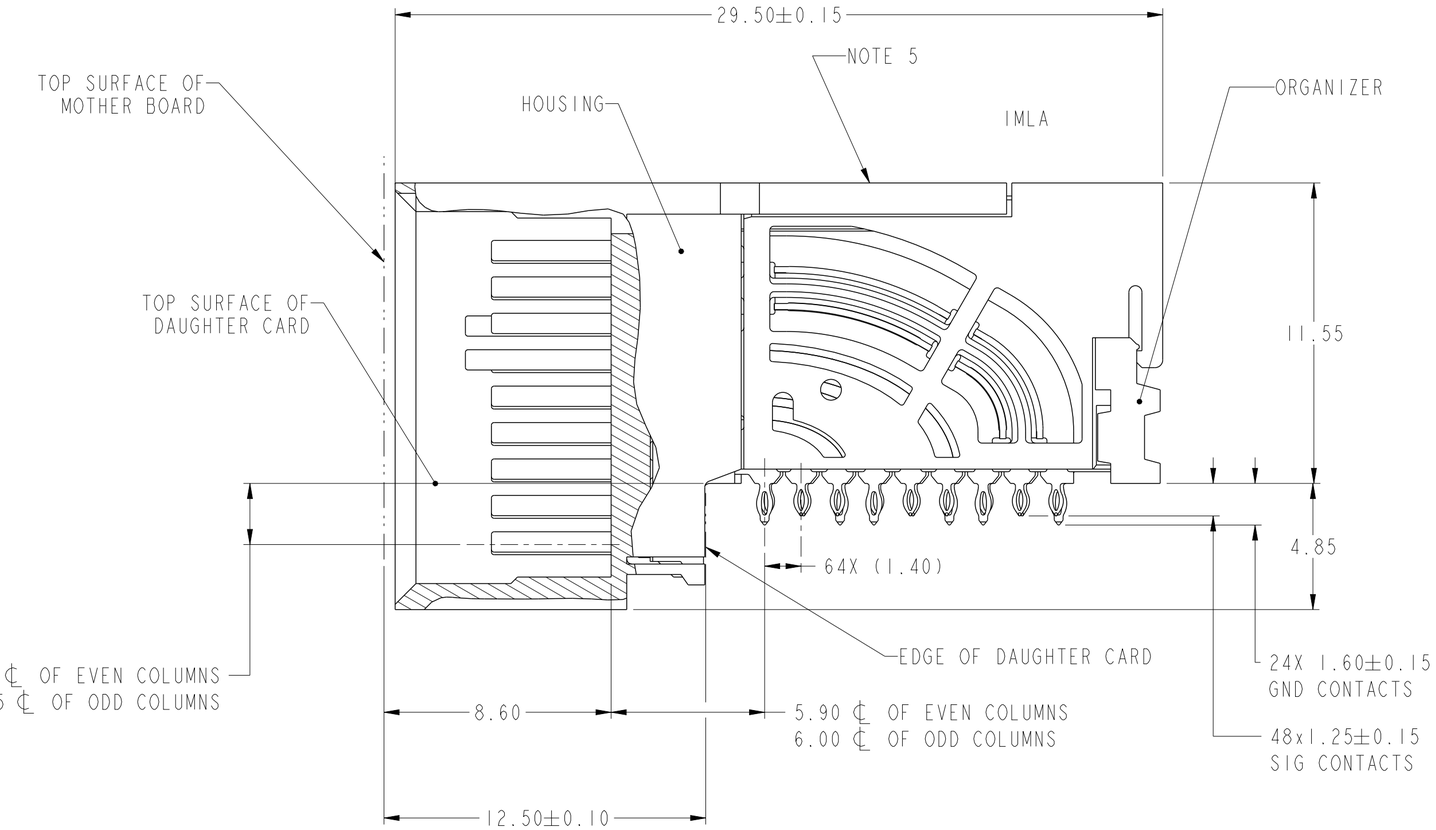

SECTION AA-AA

spec ref	---			dr	Lin-Soe Ngwe	2013/03/20	projection	MM	size A2 / scale 6:1
tolerance std ASME Y14.5M	TOLERANCES UNLESS OTHERWISE SPECIFIED			eng	Art Lin	2016/11/15			
				chr	Heaven Cen	2016/11/17			ecn no ELX-DG-25255-1
				appr	Pei-Ming Zheng	2016/11/18	product family	AirMax VSE	rel level Released
surface -	linear	0.X	±.3	Amphenol FCi	title	AirMax VS2 R.A. HEADER	dwg no	10124755	rev E
		0.XX	±.15			3 Pair, 72 pos, 2mm, 8Col, Small Press Fit			
		0.XXX	±.050						
	angular	0°	±2°	www.fci.com	cat. no.	-	Product - Customer Drw		sheet 1 of 3

© 2016 AFCI

Amphenol FCi

Creo File - REV E - 2016-02-12

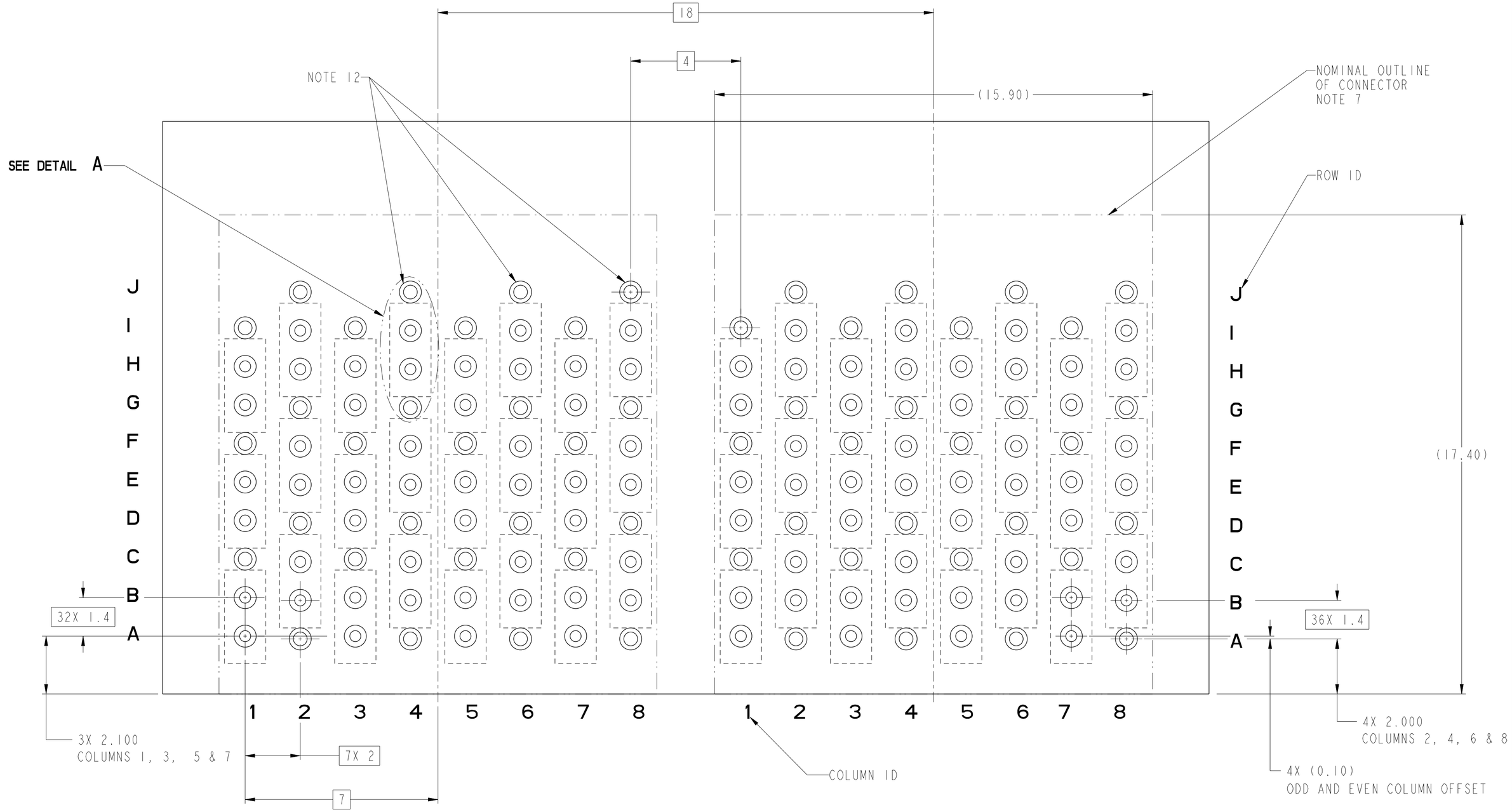

RECOMMENDED PCB LAYOUT
FOR DIFFERENTIAL APPLICATIONS
COMPONENT SIDE
(TWO ADJACENT FOOTPRINTS SHOWN)
NOTES 8 & 12

SCALE 10:1

spec ref	---		dr	Lin-Soe Ngwe	2013/03/20	projection	MM	size A2 / scale 8:1
tolerance std ASME Y14.5M	TOLERANCES UNLESS OTHERWISE SPECIFIED		eng	Art Lin	2016/11/15			ecn no ELX-DG-25255-1
			chr	Heaven Cen	2016/11/17			
			appr	Pei-Ming Zheng	2016/11/18	product family	AirMax VSE	rel level Released
surface -	linear	0.X	±.3	title	AirMax VS2 R.A. HEADER	dwg no	10124755	rev E
		0.XX	±.15		3 Pair, 72 pos, 2mm, 8Col, Small Press Fit			
		0.XXX	±.050					
	angular	0°	±2°	www.fci.com	cat. no. -	Product - Customer Drw		sheet 2 of 3

Amphenol FCi
© 2016 AFCI

PRODUCT NUMBER	PRESS-FIT TAIL PLATING TYPE	SHORT DETECT CONTACT	REMARK
10124755-101	TIN/LEAD ALLOY OVER NICKEL	NO	ONE SIDE PLATING (CUSTOMER SPECIAL)
10124755-101LF	TIN OVER NICKEL (LEAD FREE)		
10124755-111	TIN/LEAD ALLOY OVER NICKEL	YES (SEE NOTE 13)	
10124755-111LF	TIN OVER NICKEL (LEAD FREE)		
10124755-102	TIN/LEAD ALLOY OVER NICKEL	NO	TWO SIDE PLATING
10124755-102LF	TIN OVER NICKEL (LEAD FREE)		
10124755-112	TIN/LEAD ALLOY OVER NICKEL	YES (SEE NOTE 13)	
10124755-112LF	TIN OVER NICKEL (LEAD FREE)		

1 - CONNECTOR MATERIALS:
HOUSING: HIGH TEMP THERMOPLASTIC, NATURAL, UL94-V0
IMLA PLASTIC: HIGH TEMP THERMOPLASTIC, BLACK, UL94-V0
CONTACT: COPPER ALLOY
ORGANIZER: HIGH TEMP THERMOPLASTIC, NATURAL, UL94-V0

2 - CONTACT PLATING:
SEPARABLE INTERFACE:
GXT PLUS PLATING, QUALIFIED TO MEET THE
REQUIREMENTS OF FCI PRODUCT SPECIFICATION GS-12-0956
INCLUDING TELCORDIA GR-1217-CORE (NOVEMBER 1995)
CENTRAL OFFICE TEST SEQUENCE

PRESS-FIT TAILS: SEE TABLE

3 - PRODUCT SPECIFICATION: GS-12-0956

4 - APPLICATION SPECIFICATION: GS-20-0305

5 - PRODUCT MARKING, (PROTOTYPE, PART NUMBER & LOT CODE), ON THIS SURFACE.

6 - POSITIONS "F" OF ODD NUMBERED COLUMNS
AND POSITIONS "G" OF EVEN NUMBERED COLUMNS
CORRESPOND TO EARLY MATE HEADER PINS.

7 - CONNECTOR OUTLINE MAY BE SCREEN PRINTED ONTO CUSTOMER PCB TO
BE USED AS A GUIDE FOR CONNECTOR PLACEMENT.

8 - REFER TO CUSTOMER DRAWING 10104444 FOR INFORMATION
ON PCB HOLE DIAMETERS AND PLATING OPTIONS

9 - LEAD FREE PRODUCT MEETS THE EUROPEAN UNION DIRECTIVES &
OTHER COUNTRY REGULATIONS AS DESCRIBED IN GS-22-008

10 - PACKAGING MEETS GS-14-920 LEAD FREE LABELING
SPECIFICATION.

11 - GROUND CONTACTS (C, F, & I IN ODD COLUMNS AND
A, D, & G IN EVEN COLUMNS) REQUIRE (∅0.50) FINISHED HOLES.
SIGNAL LOCATIONS REQUIRE (∅0.40) FINISHED HOLES

12 - THESE OUTER VIAS (J) ARE OPTIONAL. WHILE NO CONNECTOR EONS ARE
PRESSED INTO THESE HOLES WE RECCOMMEND (∅0.500) FINISHED HOLES
AT THESE LOCATIONS TO PROVIDE GROUND SYMMETRY THROUGH THE PCB.

13 - MATING PIN E4 HAS 0.5mm LESS NOMINAL WIPE THAN THE SHORTEST PIN.

14 - A △ SYMBOL WILL BE NEXT TO ANY DIMENSION, VIEW, OR NOTE, WHICH
HAS BEEN MODIFIED WITH THE CURRENT DRAWING REVISION

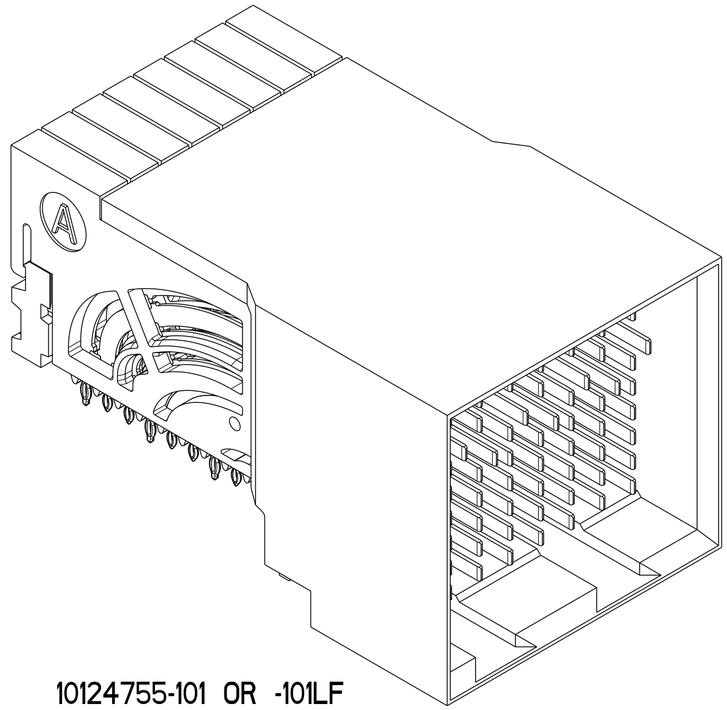

10124755-101 OR -101LF

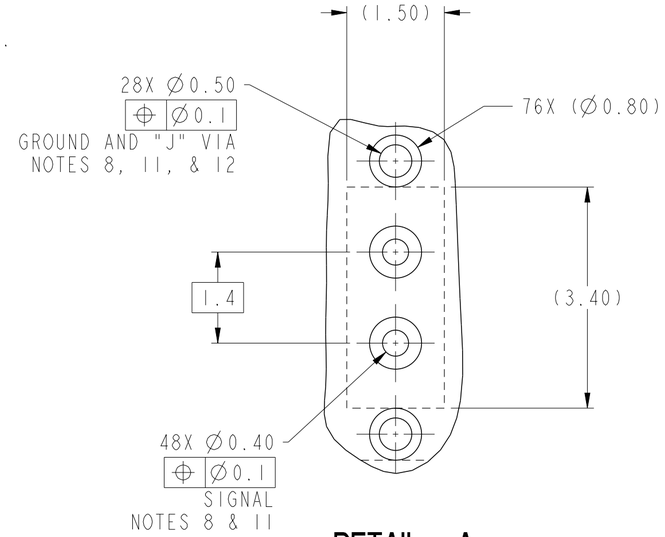

DETAIL A
SCALE 15:1

spec ref	---	dr	Lin-Soe Ngwe	2013/03/20	projection	MM	size A2 / scale 5:1
tolerance std ASME Y14.5M	TOLERANCES UNLESS OTHERWISE SPECIFIED	eng	Art Lin	2016/11/15			
		chr	Heaven Cen	2016/11/17			ecn no ELX-DG-25255-1
		appr	Pei-Ming Zheng	2016/11/18	product family	AirMax VSE	rel level Released
surface	linear 0.X ±.3; 0.XX ±.15; 0.XXX ±.050; angular 0° ±2°	Amphenol FCi	title	AirMax VS2 R.A. HEADER, 3 Pair, 72 pos, 2mm, 8Col, Small Press Fit	dwg no	10124755	rev E
		www.fci.com	cat. no.	-	Product - Customer Drw		sheet 3 of 3

© 2016 AFCI

Creo File - REV E - 2016-02-12