THIS DRAWING IS UNPUBLISHED. RELEASED FOR PUBLICATION -,- .
© COPYRIGHT - By - ALL RIGHTS RESERVED.

LOC	DIST
DF	SO

REVISIONS

P	LTR	DESCRIPTION	DATE	DWN	APVD
	H	REV PER ECO 06-006193	29MAR06	PY	DE
	J	REVISED PER ECO-14-008032	22JUL14	MGM	CT

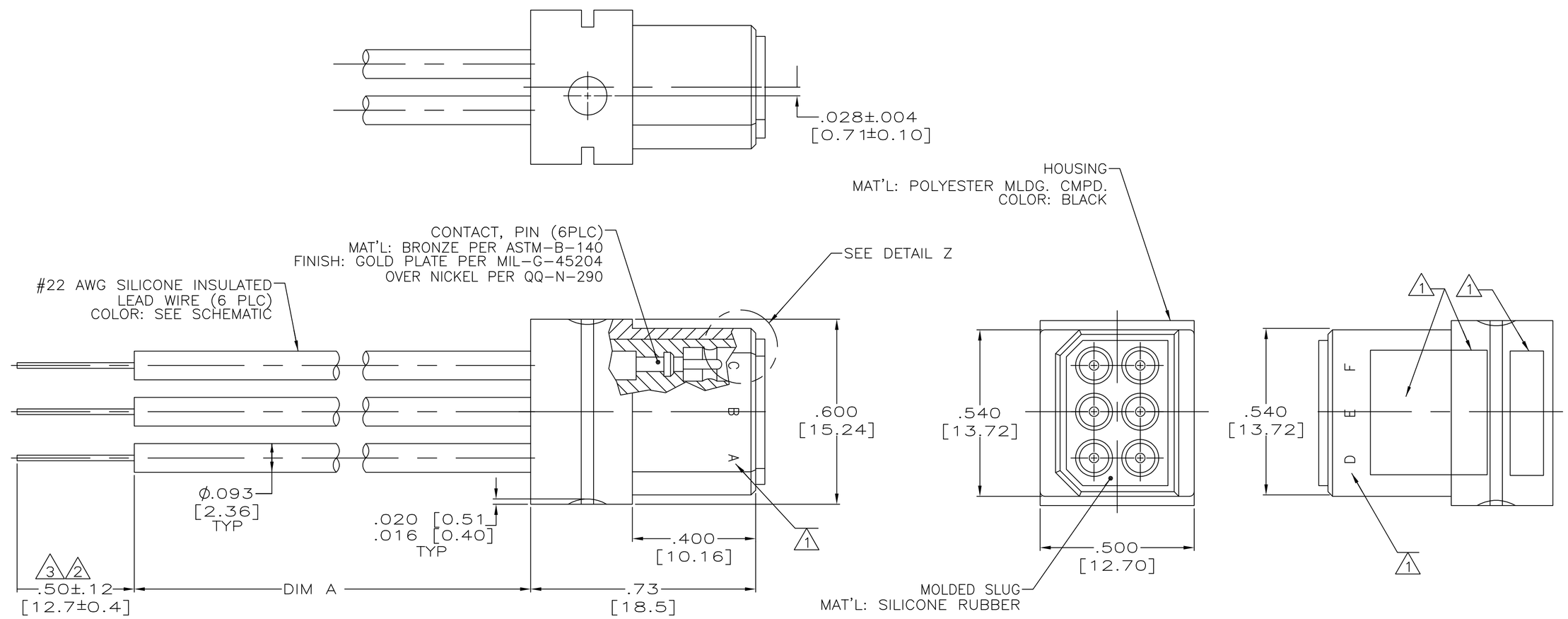

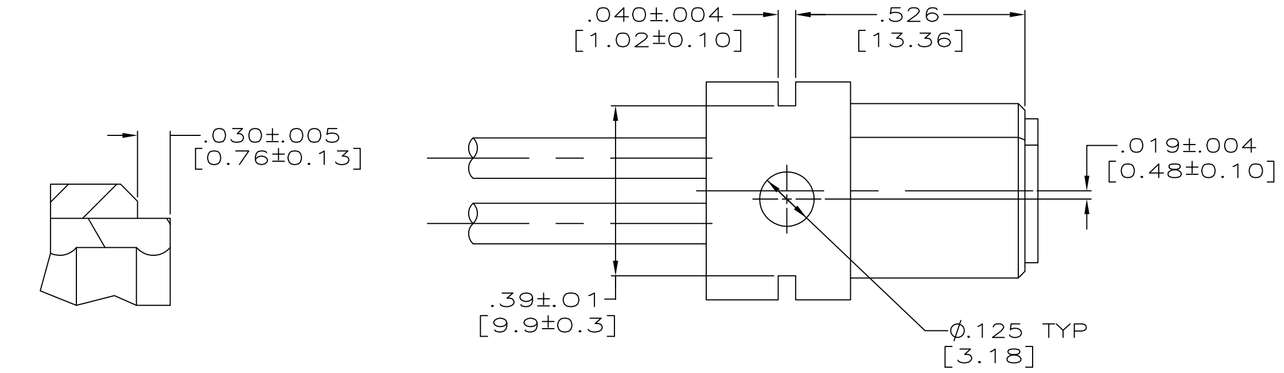

DETAIL Z
SCALE 10:1

A	YELLOW
B	RED
C	BROWN
D	BLUE
E	GREEN
F	BLACK

SCHEMATIC

REMARKS	DIM A	PART NUMBER
3	15.00±.50 [381.0±12.7]	5-867622-1
2	24.00±.50 [609.6±12.7]	867622-2
2	15.00±.50 [381.0±12.7]	867622-1

1. AMP INFORMATION MARKED PER MIL-STD-130.
2. PIGTAILS ARE SOLDER-DIPPED.
3. INSULATION CUT, BUT NOT REMOVED.

THIS DRAWING IS A CONTROLLED DOCUMENT.

DIMENSIONS: INCHES

TOLERANCES UNLESS OTHERWISE SPECIFIED:
0 PLC ± -
1 PLC ± -
2 PLC ± .03 [0.8]
3 PLC ± .015 [0.38]
4 PLC ± -
ANGLES ± -

MATERIAL: SEE CALLOUTS
FINISH: SEE CALLOUTS

DWN C.C.THOMAS 12-1-92
CHK D.FABY 1-11-93
APVD -
PRODUCT SPEC -
APPLICATION SPEC -
WEIGHT -

TE Connectivity

NAME: PLUG ASSY WITH FLYING LEADS,6 POSN.,LGH

SIZE	CAGE CODE	DRAWING NO	RESTRICTED TO
A1	00779	C-867622	-

CUSTOMER DRAWING | SCALE 4:1 | SHEET 1 OF 1 | REV J

4805 (3/11)