3M™ MetPak™ 2-FB Power Socket

2 mm 4/5-Row, Right Angle, Solder or Press-Fit Tail — MP2 Series

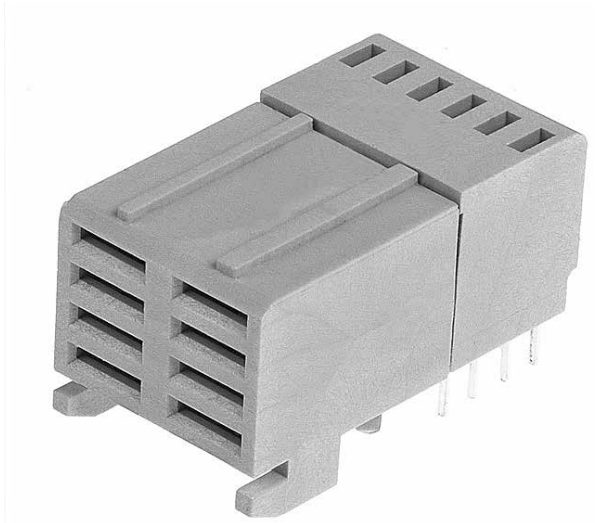

- 6.50 Amps per contact
- End-to-end stackable
- Press or heat stake peg (solder tail)
- Futurebus+® compatible
- See the Regulatory Information Appendix (RIA) in the "RoHS compliance" section of www.3Mconnectors.com for compliance information (RIA E1 & C1 apply)

Date Modified: February 14, 2017

TS-1125-E
Sheet 1 of 4

Physical

Insulation:

Material: High Temperature LCP

Flammability: UL 94V-0

Color: Beige

Contact:

Material: Copper Alloy

Plating:

Underplating: 50 µ" [1.27 µm] Nickel

Wiping Area: See Ordering Information

Tails: See Ordering Information

Electrical

Current Rating: Power: 6.50 A per power socket contact at 70°C

Insulation Resistance: 10^3 MΩ

Withstanding Voltage: 1,500 V_{AC} for 60 seconds

Environmental

Temperature Rating: -55° C to 125° C

Process Temperature Rating: 260°C (Profile per J-STD-020C)

Moisture Sensitivity Level: 1 (per J-STD-020C)

UL File No.: E68080

Futurebus+ is a registered trademark of the Institute of Electrical and Electronic Engineers, Inc. (IEEE)

3M™ MetPak™ 2-FB Power Socket

2 mm 4/5-Row, Right Angle, Solder or Press-Fit Tail

MP2 Series

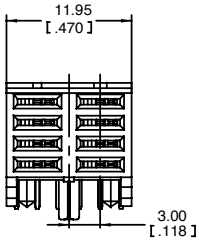

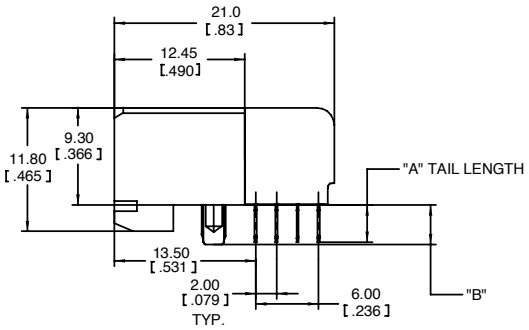

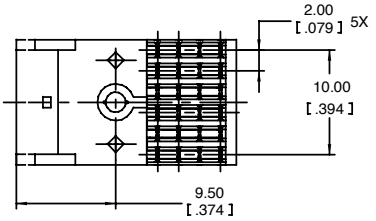

4 ROW PRODUCT

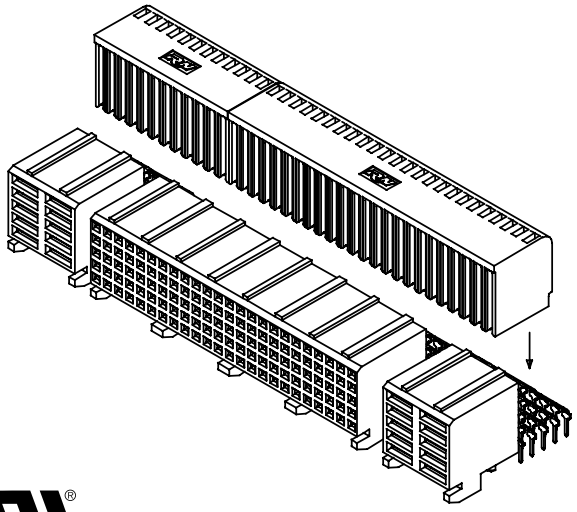

FOR SPECIAL MONOBLOCKS
CONTACT 3M SALES
REPRESENTATIVE

mm
(Inch)

Tolerance Unless Noted			
	0	0.0	0.00
mm	±3	±0.3	±0.13

( ) Dimensions used for
Reference Only

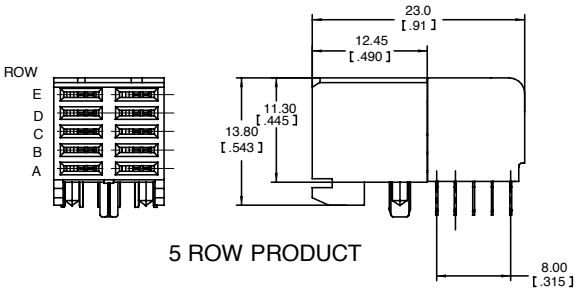

5 ROW PRODUCT

Note:
1. Refer to IEC 61076-4-104 Futurebus+® global standard.
2. "Press Fit" describes a contact tail having a compliant section designed to make a reliable electrical connection with a plated through-hole (PTH) in a printed circuit board, typically a "back plane."

Ordering Information

MP2-SPXX-X1XX- XXXXX

SP = Power Socket

Contact Count
(See Table 1)

Rows
4 = 4 Rows
5 = 5 Rows

Termination Style
P = Press-Fit
M = Solder Tail (Press Peg)

Tail Length
(See Table 2)

Plating Options:
(See Table 3)

TS-1125-E
Sheet 2 of 4

3M and MetPak are trademarks of 3M Company.

For technical, sales or ordering information call
800-225-5373

Table 1	
Pin Count	**No of Rows**
08	4
10	5

Table 2 - Tail & Post Lengths			
Contact-to-PC Board Tail Termination Option No.		**Dim. "A"**	**Dim. "B"**
Solder	Press-Fit*		
S1		2.72 [0.107]	5.20 [0.205]
S2		3.53 [0.139]	6.00 [0.256]
M1		2.72 [0.107]	3.75 [0.148]
M2	P1	3.53 [0.139]	3.75 [0.148]

*Compliant-Pin Tail

Table 3 - Plating			
Plating Suffix	**Press-Fit Tails***	**Solder Tails**	**Plating Composition**
KR	RIA E1 & C1 apply	RIA E1 & C1 apply	0.76 µm [30 µ"] Min. Au Contact Area 2.54 µm [100 µ"] Min. Matt Whisker Mitigating Sn Tail Area 1.27 µm [50 µ"] Min. Ni all over
LR	RIA E1 & C1 apply	RIA E1 & C1 apply	0.08 µm [3 µ"] Min. Au Contact Area 0.67 µm [27 µ"] Min. PdNi Contact Area 2.54 µm [100 µ"] Min. Matt Whisker Mitigating Sn Tail Area 1.27 µm [50 µ"] Min. Ni all over

*Compliant-Pin Tail

3M

Electronic Materials Solutions Division
Interconnect Solutions
http://www.3Mconnectors.com

3M and MetPak are trademarks of 3M Company.

For technical, sales or ordering information call
800-225-5373

3M™ MetPak™ 2-FB Power Socket

2 mm 4/5-Row, Right Angle, Solder or Press-Fit Tail MP2 Series

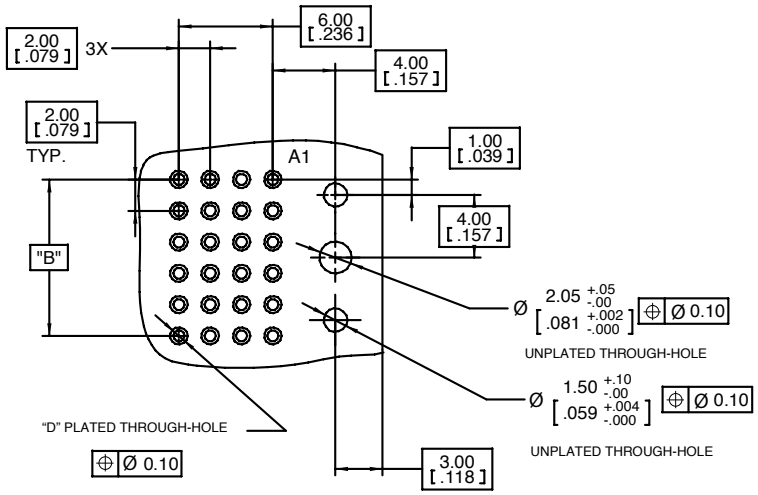

Recommended 4 Row PCB Hole Mounting Pattern

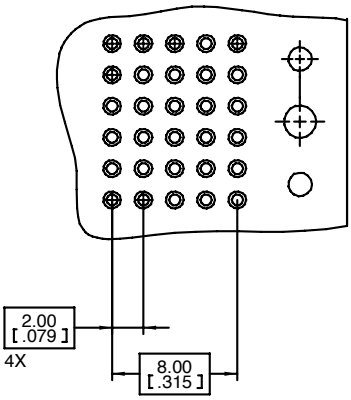

Recommended 5 Row PCB Hole Mounting Pattern

Table 4 - HOLE PLATING FINISHES

HOLE	Finished Dia. mm [in]	Cu Thickness mm [in]	Immersion Matte Sn Thickness microns [µ"]	Electrolitic Au Thickness microns [µ"]	OSP ENTEK Thickness microns [µ"]	Drilled Hole Dia. mm [in]
"D"	0.700-0.800 [.0276-.0315]	0.025-0.045 [0.001-0.002]	0.5 - 2.5 [20 - 100]	0.1 - 0.5 [4 - 20]	0.2 - 0.5 [8 - 20]	0.830-0.860 [.0330-.0340] or 0.85mm [#66] TWIST DRILL

TS-1125-E
Sheet 4 of 4

3M and MetPak are trademarks of 3M Company.

For technical, sales or ordering information call
800-225-5373

Regulatory: For regulatory information about this product, contact your 3M representative.

Technical Information: The technical information, recommendations and other statements contained in this document are based upon tests or experience that 3M believes are reliable, but the accuracy or completeness of such information is not guaranteed.

Product Use: Many factors beyond 3M's control and uniquely within user's knowledge and control can affect the use and performance of a 3M product in a particular application. Given the variety of factors that can affect the use and performance of a 3M product, user is solely responsible for evaluating the 3M product and determining whether it is fit for a particular purpose and suitable for user's method of application.

Warranty, Limited Remedy, and Disclaimer: Unless an additional warranty is specifically stated on the applicable 3M product packaging or product literature, 3M warrants that each 3M product meets the applicable 3M product specification at the time 3M ships the product. 3M MAKES NO OTHER WARRANTIES OR CONDITIONS, EXPRESS OR IMPLIED, INCLUDING, BUT NOT LIMITED TO, ANY IMPLIED WARRANTY OR CONDITION OF MERCHANTABILITY OR FITNESS FOR A PARTICULAR PURPOSE OR ANY IMPLIED WARRANTY OR CONDITION ARISING OUT OF A COURSE OF DEALING, CUSTOM OR USAGE OF TRADE. If the 3M Product does not conform to this warranty, then the sole and exclusive remedy is, at 3M's option, replacement of the 3M product or refund of the purchase price.

Limitation of Liability: Except where prohibited by law, 3M will not be liable for any loss or damage arising from the 3M product, whether direct, indirect, special, incidental or consequential, regardless of the legal theory asserted, including warranty, contract, negligence or strict liability.

3M Electronics Materials Solutions Division
6801 River Place Blvd.
Austin, TX 78726-9000
U.S.A.
1-800-225-5373
www.3Mconnectors.com

3M and MetPak are trademarks of 3M Company. All other trademarks belong to their respective owners. Please recycle. Printed in USA. © 3M 2017. All rights reserved.

RIA-2217B-E