TDK

May 2019

Disc Type Capacitors with Lead

High Voltage Ceramic Capacitors

Automotive Grade, Low dissipation at high frequency

CK45-RR series

Type: **CK45-R [R characteristics, Edc: 1kV to 2kV]**

REMINDERS FOR USING THESE PRODUCTS

Before using these products, be sure to request the delivery specifications.

SAFETY REMINDERS

Please pay sufficient attention to the warnings for safe designing when using these products.

⚠ REMINDERS

- Do not use or store in locations where there are conditions such as gas corrosion (salt, acid, alkali, etc.).
- Before soldering, be sure to preheat components.
  The preheating temperature should be set so that the temperature difference between the solder temperature and product temperature does not exceed 150°C.
- Soldering corrections after mounting should be within the range of the conditions determined in the specifications.
  If overheated, a short circuit, performance deterioration, or lifespan shortening may occur.
- Self heating (temperature increase) occurs when the power is turned ON, so the tolerance should be sufficient for the set thermal design.
- Do not use for a purpose outside of the contents regulated in the delivery specifications.
- The products listed on this catalog are intended for use in automotive electronic equipment under a normal operation and use condition.
  The products are not designed or warranted to meet the requirements of the applications listed below, whose performance and/or quality require a more stringent level of safety or reliability, or whose failure, malfunction or trouble could cause serious damage to society, person or property.
  If you intend to use the products in the applications listed below or if you have special requirements exceeding the range or conditions set forth in the each catalog, please contact us.

(1) Aerospace/Aviation equipment
(2) Transportation equipment (electric trains, ships, etc.)
(3) Medical equipment
(4) Power-generation control equipment
(5) Atomic energy-related equipment
(6) Seabed equipment
(7) Transportation control equipment
(8) Public information-processing equipment
(9) Military equipment
(10) Electric heating apparatus, burning equipment
(11) Disaster prevention/crime prevention equipment
(12) Safety equipment
(13) Other applications that are not considered general-purpose applications

- Please refer to the guideline of notabilia for fixed ceramic capacitors issued by JEITA(Japan Electronics and Information Technology Association, EIAJ RCR-2335).

When designing your equipment even for automotive-purpose applications, you are kindly requested to take into consideration securing protection circuit/device or providing backup circuits in your equipment.

Disc Type Capacitors with Lead

Product compatible with RoHS directive
Halogen-free

High Voltage Ceramic Capacitors, Automotive Grade, Low dissipation at high frequency

Overview of CK45-RR Series

FEATURES

- AEC-Q200 compliant.
- 1,000 cycles guaranteed under heat shock testing at –55°C to +125°C.
- It can be used as a capacitor for snubber circuits used in automobiles (EV, HEV).
- Low dissipation factor, and decreased self-heating temperature in the high frequency, and high voltage application.
- These products shall conform to RoHS Directive due to lead(Pb) free of lead wire and internal solder material.
- Compatible with halogen-free external resin coating.

APPLICATION

For use in snubber circuit protection for battery chargers used in automobiles.

PART NUMBER CONSTRUCTION

CK45 - R 3AD 102 K A □ R A

Series name*	Temperature characteristics	Rated voltage	Nominal capacitance	Capacitance tolerance	Grade classification	Lead type	Application classification	Internal code
	R: +15, –30%	3AD: 1kV 3DD: 2kV	101: 100pF 222: 2,200pF	K: ±10%	A: For use in automobiles	G: Long lead N: Short lead V: Taping	R: Low dissipation	A: Halogen-free

* Please refer to P-5~6 about the product dimensions.

OPERATING TEMPERATURE RANGE

Temperature characteristics	Temperature range*	
	Operating temperature (°C)	Storage temperature** (°C)
R	–40 to +125	–40 to +125

* The maximum operating temperature of 125°C includes capacitor self-generated heat of up to 20°C.
** After capacitor is mounted on board, the storage temperature range is applied.

PACKAGE QUANTITY

Type	Package quantity	
	Taping (pieces / box)	Bulk (pieces / bag)
CK45-R	1000	1000

* 500 pieces applies to the following part.
CK45-R3AD222KAVRA

- RoHS Directive Compliant Product: See the following for more details related to RoHS Directive compliant products. http://product.tdk.com/en/environment/rohs/
- Halogen-free: Indicates that Cl content is less than 900ppm, Br content is less than 900ppm, and that the total Cl and Br content is less than 1500ppm.

⚠ Please be sure to request delivery specifications that provide further details on the features and specifications of the products for proper and safe use.
Please note that the contents may change without any prior notice due to reasons such as upgrading.

Overview of CK45-RR Series

RECOMMENDED FLOW PROFILE

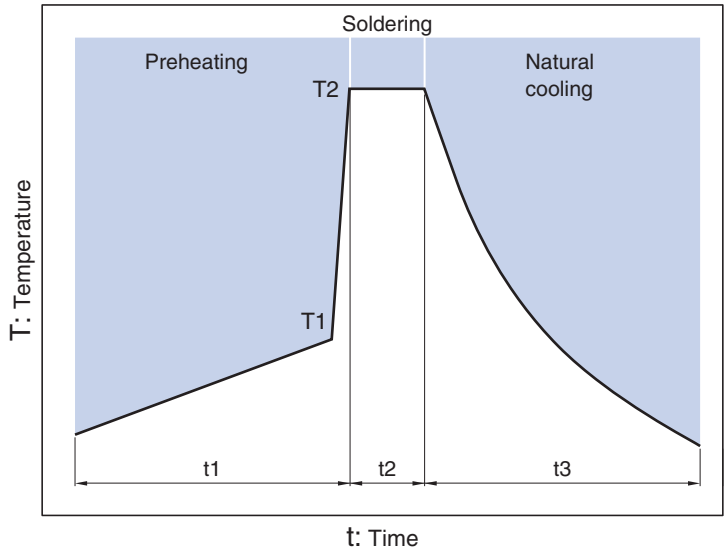

Preheating		Peak		Natural cooling
Temp.	**Time**	**Temp.**	**Time**	**Time**
T1	**t1**	**T2**	**t2**	**t3**
110°C min.	30 to 60s.	260°C	Within 10s.	Over 60s.

⚠ Please be sure to request delivery specifications that provide further details on the features and specifications of the products for proper and safe use.
Please note that the contents may change without any prior notice due to reasons such as upgrading.

CK45-R Type

CAPACITANCE AND DIMENSIONS

□Temperature Characteristics: R (+15, –30%)

□Rated Voltage Edc: 1kV

Capacitance (pF)	Capacitance tolerance	Dimensions (mm)					Taping dimensions***	Part No.*
		D max.	T max.	F (Applied to bulk)	F (Applied to taping)	d		
100	±10%	6.0	5.0	5.0±1.5	5.0+0.8,-0.2	0.6±0.05	V1	CK45-R3AD101KA□RA**
150	±10%	6.0	5.0	5.0±1.5	5.0+0.8,-0.2	0.6±0.05	V1	CK45-R3AD151KA□RA
220	±10%	7.0	5.0	5.0±1.5	5.0+0.8,-0.2	0.6±0.05	V1	CK45-R3AD221KA□RA
330	±10%	7.5	5.0	5.0±1.5	5.0+0.8,-0.2	0.6±0.05	V1	CK45-R3AD331KA□RA
470	±10%	8.5	5.0	5.0±1.5	5.0+0.8,-0.2	0.6±0.05	V1	CK45-R3AD471KA□RA
680	±10%	9.5	5.0	5.0±1.5	5.0+0.8,-0.2	0.6±0.05	V1	CK45-R3AD681KA□RA
1,000	±10%	11.0	5.0	5.0±1.5	5.0+0.8,-0.2	0.6±0.05	V1	CK45-R3AD102KA□RA
1,500	±10%	12.5	5.0	7.5±1.5	7.5±0.8	0.6±0.05	V2	CK45-R3AD152KA□RA
2,200	±10%	15.0	5.0	7.5±1.5	7.5±0.8	0.6±0.05	V3	CK45-R3AD222KA□RA

* The part numbers are TDK's standard specification products.

** The " □ " of the Part Number contains the lead type, G, N or V. Please refer to the details of each shape is shown below.

*** Please refer to P-7 about the taping dimemsions.

LIST OF STANDARD LEAD SHAPES

Dimemsions in mm

	Symbol G Bulk/Long lead	Symbol N Bulk/Short lead	Symbol V Taping
Vertical kink	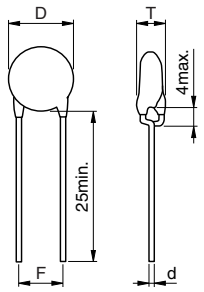	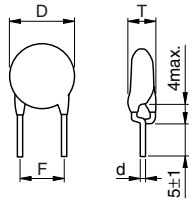	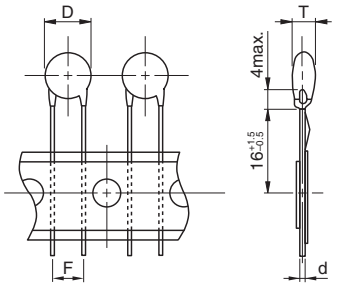

• TDK's standard product is vertical kink.

• TDK's recommendation is short lead type with the symbol N for bulk products.

⚠ Please be sure to request delivery specifications that provide further details on the features and specifications of the products for proper and safe use.
Please note that the contents may change without any prior notice due to reasons such as upgrading.

CK45-R Type

CAPACITANCE AND DIMENSIONS

□Temperature Characteristics: R (+15, –30%)

□Rated Voltage Edc: 2kV

Capacitance (pF)	Capacitance tolerance	Dimensions (mm)					Taping dimensions***	Part No.*
		D max.	T max.	F (Applied to bulk)	F (Applied to taping)	d		
100	±10%	6.0	6.0	7.5±1.5	7.5±0.8	0.6±0.05	V2	CK45-R3DD101KA□RA**
150	±10%	7.0	6.0	7.5±1.5	7.5±0.8	0.6±0.05	V2	CK45-R3DD151KA□RA
220	±10%	7.5	6.0	7.5±1.5	7.5±0.8	0.6±0.05	V2	CK45-R3DD221KA□RA
330	±10%	8.5	6.0	7.5±1.5	7.5±0.8	0.6±0.05	V2	CK45-R3DD331KA□RA
470	±10%	9.5	6.0	7.5±1.5	7.5±0.8	0.6±0.05	V2	CK45-R3DD471KA□RA
680	±10%	10.5	6.0	7.5±1.5	7.5±0.8	0.6±0.05	V2	CK45-R3DD681KA□RA
1,000	±10%	12.5	6.0	7.5±1.5	7.5±0.8	0.6±0.05	V2	CK45-R3DD102KA□RA

* The part numbers are TDK's standard specification products.

** The " □ " of the Part Number contains the lead type, G, N or V. Please refer to the details of each shape is shown below.

*** Please refer to P-7 about the taping dimemsions.

LIST OF STANDARD LEAD SHAPES

Dimemsions in mm

	Symbol G Bulk/Long lead	Symbol N Bulk/Short lead	Symbol V Taping
Vertical kink	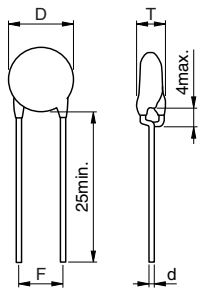	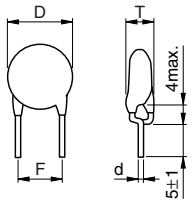	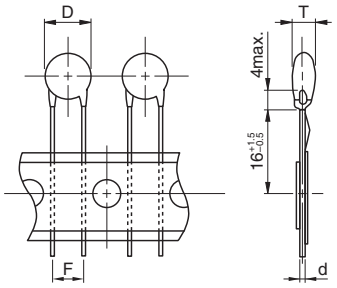

• TDK's standard product is vertical kink.

• TDK's recommendation is short lead type with the symbol N for bulk products.

⚠ Please be sure to request delivery specifications that provide further details on the features and specifications of the products for proper and safe use.
Please note that the contents may change without any prior notice due to reasons such as upgrading.

CK45-R Type

TAPING DIMEMSIONS

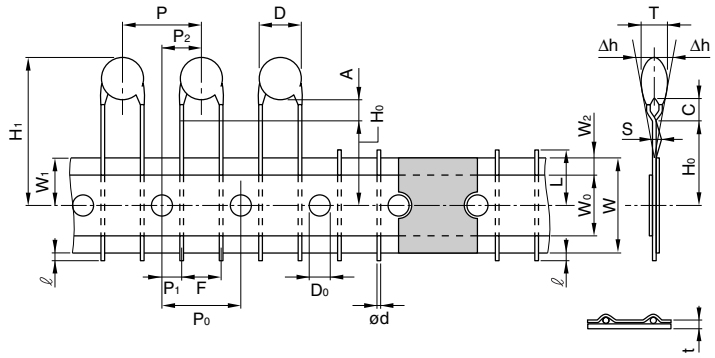

V1, V2

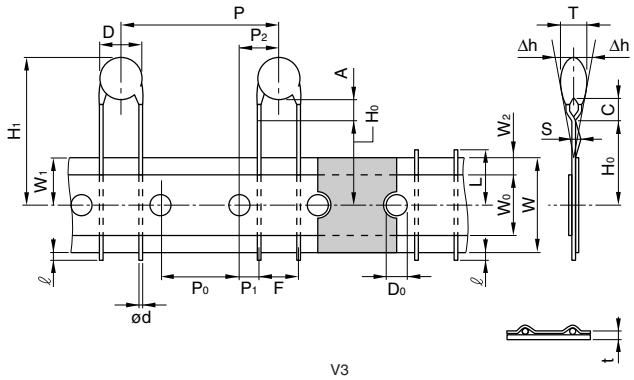

V3

Item	Symbol	Dimensions(mm)			Remarks
		V1	V2	V3	
Body diameter	D	Depends on the specification of each product.			
Body thickness	T	Depends on the specification of each product.			
Lead-wire diameter	ød	0.6±0.05	0.6±0.05	0.6±0.05	
Pitch of component	P	12.7±1.0	15.0±1.0	30.0±1.0	Including the slant of body
Feed hole pitch	P_0	12.7±0.3	15.0±0.3	15.0±0.3	Excepting the tape splicing part
Feed hole center to lead	P_1	3.85±0.7	3.75±0.7	3.75±0.7	
Feed hole center to component center	P_2	6.35±1.3	7.5±1.3	7.5±1.3	
Lead-to lead distance	F	5+0.8, –0.2	7.5±0.8	7.5±0.8	Measuring point is bottom kink
Component alignment	Δh	0±2.0	0±2.0	0±2.0	Including the slanting body due to bending lead-wire
Tape width	W	18.0+1.0, –0.5	18.0+1.0, –0.5	18.0+1.0, –0.5	
Adhesive tape width	W_0	10.0min.	10.0min.	10.0min.	
Hole position	W_1	9.0±0.5	9.0±0.5	9.0±0.5	
Adhesive tape position	W_2	4.0max.	4.0max.	4.0max.	Adhesive tape do not stick out the tape
Bottom of kink from tape center	H_0	16.0+1.5, –0.5	16.0+1.5, –0.5	16.0+1.5, –0.5	
Height of body from tape center	H_1	46.0max.	46.0max.	46.0max.	
Lead-wire protrusion	ℓ	1.0max.	1.0max.	1.0max.	
Feed hole diameter	D_0	4.0±0.2	4.0±0.2	4.0±0.2	
Total tape thickness	t	0.6±0.3	0.6±0.3	0.6±0.3	Including adhesive tape
Length of snipped lead	L	11.0max.	11.0max.	11.0max.	
Coating on lead	C	4.0max.	4.0max.	4.0max.	
Height of kink	A	4.0max.	4.0max.	4.0max.	Measuring point is bottom kink
Spring action	S	2.0max.	2.0max.	2.0max.	

AMMO PACK INNER BOX SIZE

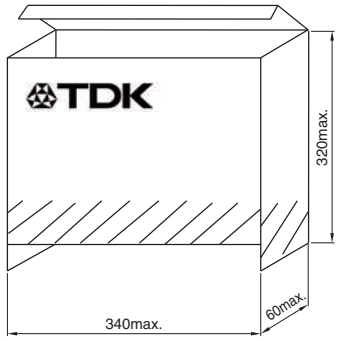

Dimensions in mm

• For more information about products with other capacitance or other data, please contact us.

⚠ Please be sure to request delivery specifications that provide further details on the features and specifications of the products for proper and safe use.
Please note that the contents may change without any prior notice due to reasons such as upgrading.