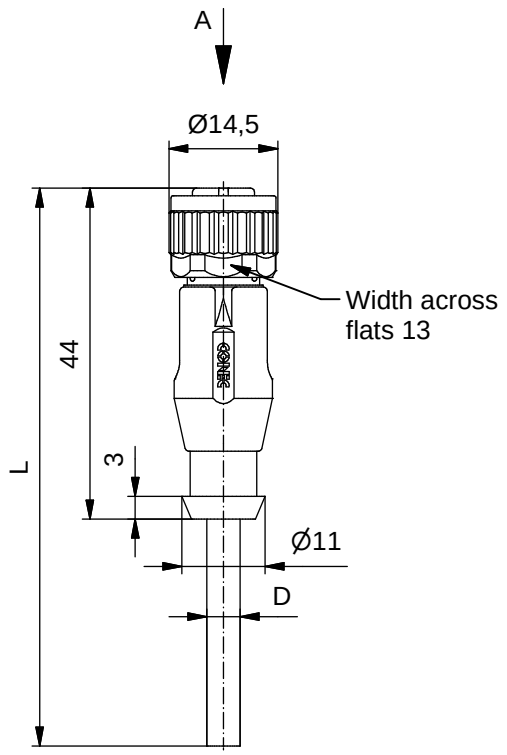


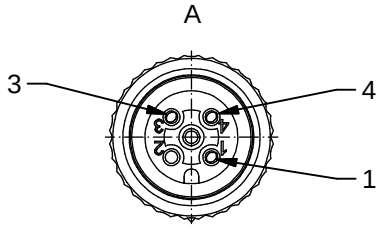


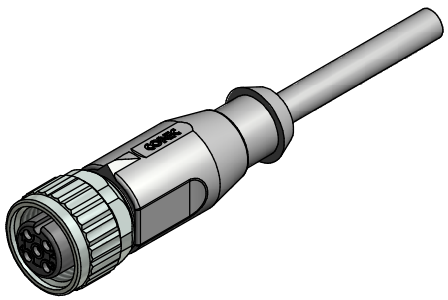

D see data sheet cable

**Technical specification :**

| | |
|---|---|
| Rated voltage:<br>IEC 61076-2-101 | 3pos<br>250 V |
| Current rating:<br>IEC 61076-2-101 | 4 A at 40℃ |
| Insulation resistance:<br>IEC 60512 | >=100 MΩ |
| Pollution degree:<br>IEC 60664-1 | 3/2 |
| Degree of protection:<br>IEC 60529 | IP 67, in mated condition |
| Temperature range:<br>IEC 60664-1 | -30℃ ... +80℃ |
| Mating cycles:<br>IEC 60512-9a | >=100 |

**Materials:**

| | |
|---|---|
| Contact: | CuZn |
| Contact plating: | Nickel, gold plated |
| Contact carrier: | TPU GF, UL 94 |
| Sealing: | FPM |
| Coupling nut: | GD-Zn, nickel plated |
| Moulding body: | TPU, UL 94, grey |

**Installation specification:**

| | |
|---|---|
| Recommended torque: | 0,6 Nm |
| Conec installation tool: | Torque wrench:<br>36-000200<br>Insert across flats 13:<br>36-000220 |

**Contact assignment:**

1) brown
3) blue
4) black

| Part no: | Description: | Length L: | Cable: |
|---|---|---|---|
| 43-10000 | SAL - 12 - RK3 - 2 / A1 | 2m | PVC,<br>grey, 3x0,34mm²<br>Cable: 781-A13300 |
| 43-10001 | SAL - 12 - RK3 - 3 / A1 | 3m | |
| 43-10002 | SAL - 12 - RK3 - 5 / A1 | 5m | |
| 43-10003 | SAL - 12 - RK3 - 10 / A1 | 10m | |
| 43-xxxxx | SAL - 12 - RK3 - ... / A1 | x | |

DO NOT ALTER CAD DRAWING BY HAND
Directive 2002/95/EC RoHS compliant

Index: a 10.01.11 VF Ä3767
Coupling nut modified, spanner flats added, data sheet modified

tolerance of cable: L <= 4m: L + 40mm
L > 4m: L + 1%

general tolerance: 0 ± 0,50mm
0,0 ± 0,25mm
0,00 ± 0,10mm

THIS DRAWING MAY NOT BE COPIED OR REPRODUCED IN ANY WAY, AND MAY NOT BE PASSED ON TO A THIRD PARTY WITHOUT WRITTEN PERMISSION. OWNERSHIP AND COPYRIGHT OF CONEC GmbH

dim. in mm

| | date | name |
|---|---|---|
| drawn | 08.03.07 | Fromm |
| appd. | 08.03.07 | Mankopf |

title: Female connector M12x1 axial

dwg no: 43K1A052

part no: see table