NOTES:
1. PARTS ARE SHIPPED NON-ASSEMBLED.
2. SEE SHEET 4 FOR PACKAGING PLAN.

REVISIONS			
REV.	DESCRIPTION	DATE	APPROVED
B	Engineering Release	7/11/2018	G.O.

PART NUMBER CONFIGURATION,

LPV4-XXXXX-XXX

LED COLOR - (SEE PAGE 3)

LIGHT PIPE CALLOUT - (SEE PAGE 2, TABLES A & B)

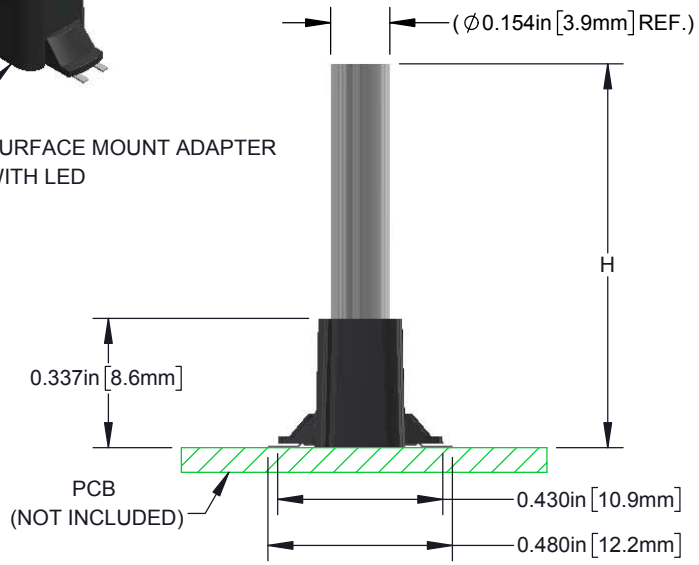

FLAT FACE LENS

DIMENSIONS ARE APPLICABLE TO BOTH
LENS FACES UNLESS OTHERWISE NOTED

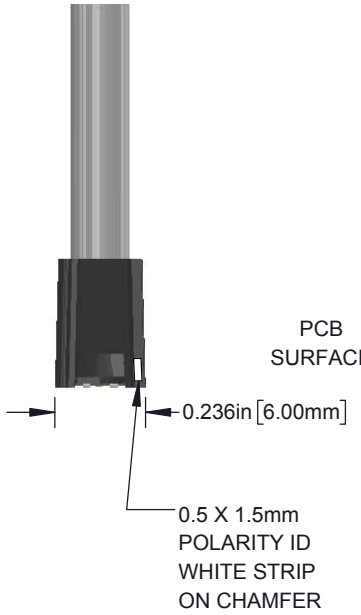

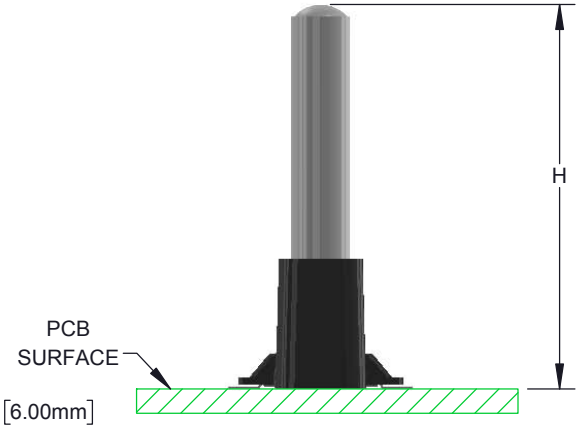

DOME FACE LENS

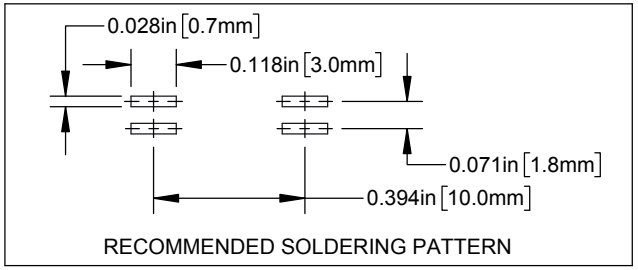

RECOMMENDED SOLDERING PATTERN

STANDARD TOLERANCE (UNLESS OTHERWISE SPECIFIED)			
DECIMALS		ANGULAR	
.X	± .1	X°	± 1°
.XX	± .02		
.XXX	± .010		

BIVAR®
4 THOMAS, IRVINE, CA. 92618
TEL: (949) 951-8808 FAX: (949) 951-3974

DESIGNED: K. BARON	DATE: 07/11/18	TITLE: BIVAR LIGHT PIPE SYSTEM SAT VERTICAL, 4MM, SINGLE STATION	
		PART NO: LPV4-XXXXX-XXX	REVISION: B
REVISED: N/A	DATE: N/A	CAGE CODE: 32559	
CHECKED: TD. NGUYEN	DATE: 07/11/18	SCALE: 2:1	SHEET # 1 OF 5

CAD GENERATED DOCUMENT, DO NOT MEASURE DRAWING

REVISIONS			
REV.	DESCRIPTION	DATE	APPROVED
	See Sheet 1		

STANDARD ORDERING INFORMATION

TABLE A - FLAT FACE LENS	
PART NO.	**H ± .01**
LPV4-0350F-XXX	0.350 [8.9mm]
LPV4-0400F-XXX	0.400 [10.2mm]
LPV4-0450F-XXX	0.450 [11.4mm]
LPV4-0500F-XXX	0.500 [12.7mm]
LPV4-0550F-XXX	0.550 [14.0mm]
LPV4-0600F-XXX	0.600 [15.2mm]
LPV4-0750F-XXX	0.750 [19.1mm]
LPV4-1000F-XXX	1.000 [25.4mm]
LPV4-1250F-XXX	1.250 [31.8mm]
LPV4-1500F-XXX	1.500 [38.1mm]
LPV4-1750F-XXX	1.750 [44.5mm]
LPV4-2000F-XXX	2.000 [50.8mm]

TABLE B - DOME FACE LENS	
PART NO.	**H ± .01**
LPV4-0350D-XXX	0.350 [8.9mm]
LPV4-0400D-XXX	0.400 [10.2mm]
LPV4-0450D-XXX	0.450 [11.4mm]
LPV4-0500D-XXX	0.500 [12.7mm]
LPV4-0550D-XXX	0.550 [14.0mm]
LPV4-0600D-XXX	0.600 [15.2mm]
LPV4-0750D-XXX	0.750 [19.1mm]
LPV4-1000D-XXX	1.000 [25.4mm]
LPV4-1250D-XXX	1.250 [31.8mm]
LPV4-1500D-XXX	1.500 [38.1mm]
LPV4-1750D-XXX	1.750 [44.5mm]
LPV4-2000D-XXX	2.000 [50.8mm]

BIVAR®

PART NO: LPV4-XXXXX-XXX	REVISION: B
SCALE: NONE	SHEET # 2 OF 5

CAD GENERATED DOCUMENT, DO NOT MEASURE DRAWING

Order Code XXX	Emitted Color	Peak Wave L. λ_P [nm] Chroma TYP	Electro-Optical Data @20mA, 25°C V_f [V] MIN	TYP	MAX	I_v [mcd] TYP	Polarity Diagram
R130	Red	640	1.7	2.0	2.5	130	FIGURE A
R480	Red	630	1.7	2.0	2.5	480	FIGURE B
A220	Amber	610	1.7	2.0	2.5	220	
O170	Orange	590	1.7	2.0	2.5	170	
Y50	Yellow	570	1.7	2.0	2.5	50	
G850	Green	520	2.8	3.2	3.7	850	
B150	Blue	465	2.8	3.2	3.7	150	
W305	White	X = 0.308 Y = 0.305	2.8	3.0	3.7	1750	
OY	Orange	590	1.7	2.0	2.5	190	FIGURE C
	Yellow	572	1.7	2.0	2.5	60	
RY	Red	640	1.7	2.0	2.5	110	FIGURE D
	Yellow	572	1.7	2.0	2.5	55	
RG	Red	640	1.7	2.0	2.5	200	FIGURE E
	Green	520	2.8	3.2	3.7	810	
RW	Red	630	1.7	2.0	2.5	130	FIGURE F
	White	X = 0.28 Y = 0.29	2.8	3.2	3.7	520	
RB	Red	650	1.7	2.0	2.5	80	FIGURE G
	Blue	465	2.8	3.2	3.7	150	
RGB	Red	643	1.7	2.0	2.5	95	FIGURE H
	Green	515	2.8	3.3	3.7	730	
	Blue	460	2.8	3.3	3.7	120	

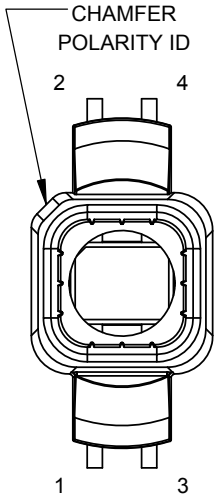

Note: 10% Duty Cycle, Pulse Width ≤ 0.1msec for Peak If.

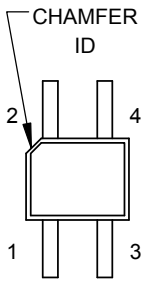

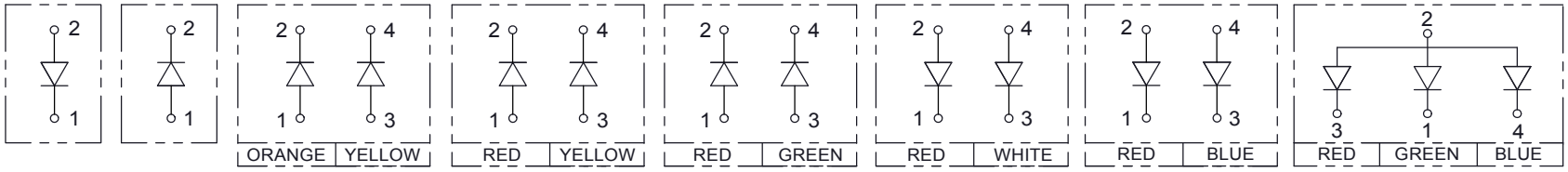

FIG. A FIG. B FIG. C FIG. D FIG. E FIG. F FIG. G FIG. H

BIVAR®

PART NO: LPV4-XXXXX-XXX	REVISION: B
SCALE: 2:1	SHEET # 3 OF 5

CAD GENERATED DOCUMENT, DO NOT MEASURE DRAWING

PACKAGING PLAN

PARTS ARE SHIPPED IN QUANTITY OF 400 AS IN THE FOLLOWING:

1. ONE BAG CONTAINING FOUR LIGHT PIPE PACKAGES, 100 EACH, AND ONE LEVEL 4 MOISTURE SEALED TRAY WITH 400 SURFACE MOUNT ADAPTERS.
2. BAG SIZE IS APPROXIMATLY 16 X 18 INCHES (406.4 X 457.2 mm).
3. TRAY SIZE IS APPROXIMATELY 10 X 14 X 0.6 INCHES (254 X 355.6 X 15.2 mm), INCLUDING TOP COVER AND BOTTOM TRAY. ADAPTERS ARE ARRANGED AS SHOWN IN FIGURE 1.

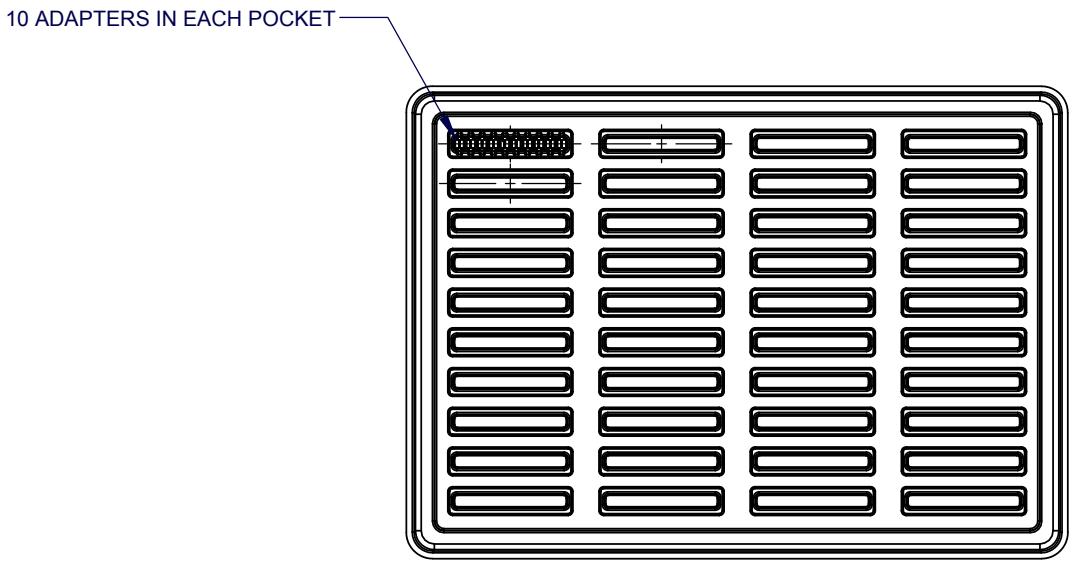

FIGURE 1
BOTTOM TRAY
4 X 10 POCKETS

BIVAR®	
PART NO: LPV4-XXXXX-XXX	REVISION: B
SCALE: NONE	SHEET # 4 OF 5
CAD GENERATED DOCUMENT, DO NOT MEASURE DRAWING	

RECOMMENDED REFLOW SOLDERING PROFILE

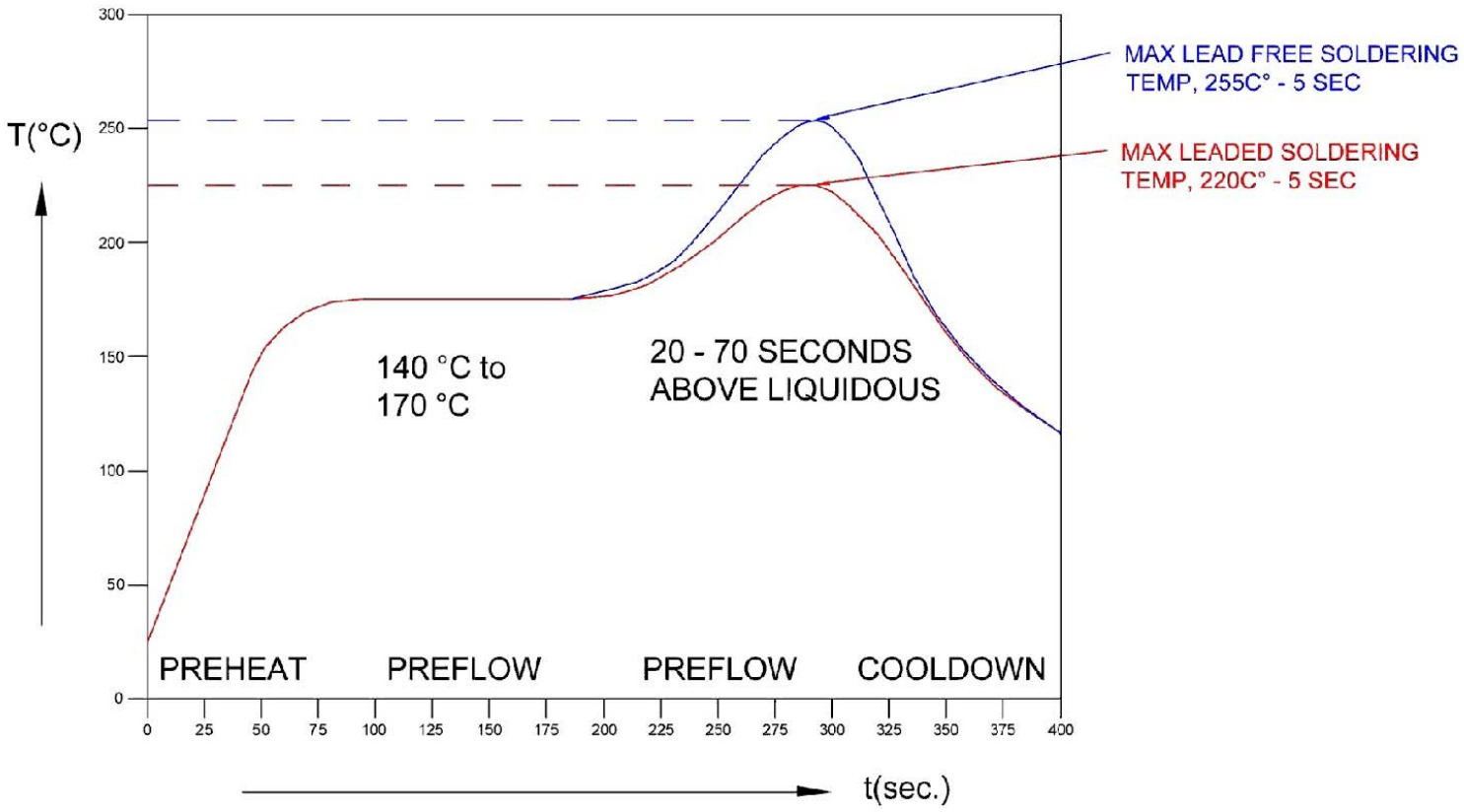

NOTE:
1. DO NOT CLEAN AFTER SOLDERING. ONLY USE NO-CLEAN SOLDER PASTE.

BIVAR®	
PART NO: LPV4-XXXXX-XXX	REVISION: B
SCALE: NONE	SHEET # 5 OF 5
CAD GENERATED DOCUMENT, DO NOT MEASURE DRAWING	