NOTES:
1. PARTS ARE SHIPPED NON-ASSEMBLED.
2. SEE SHEET 4 FOR PACKAGING PLAN.

| REVISIONS | | | |
|---|---|---|---|
| REV. | DESCRIPTION | DATE | APPROVED |
| B | Engineering Release | 7/11/2018 | G.O. |

PART NUMBER CONFIGURATION,

LPV4-XXXXX-XXX

LED COLOR - (SEE PAGE 3)

LIGHT PIPE CALLOUT - (SEE PAGE 2, TABLES A & B)

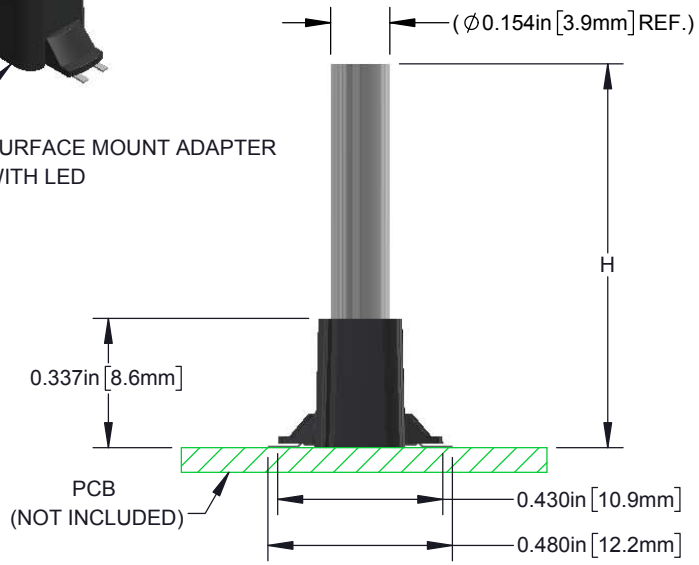


**FLAT FACE LENS**

DIMENSIONS ARE APPLICABLE TO BOTH
LENS FACES UNLESS OTHERWISE NOTED

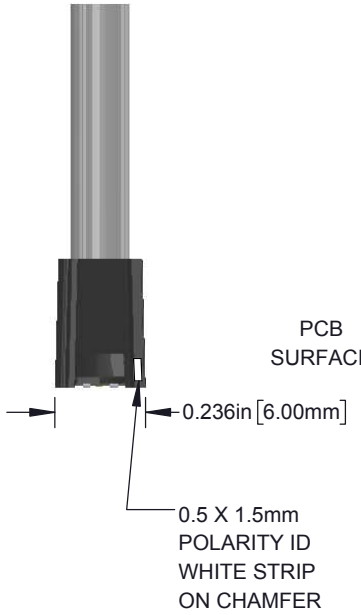


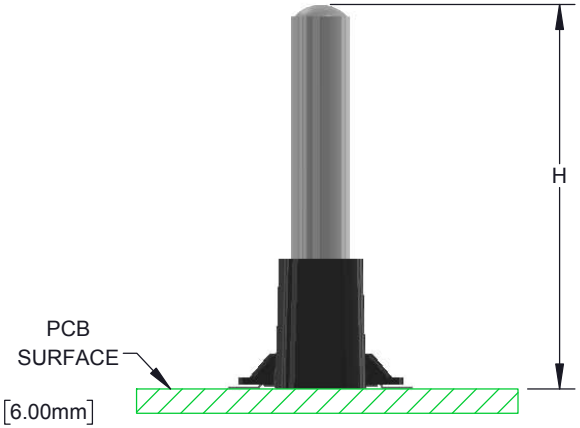


**DOME FACE LENS**

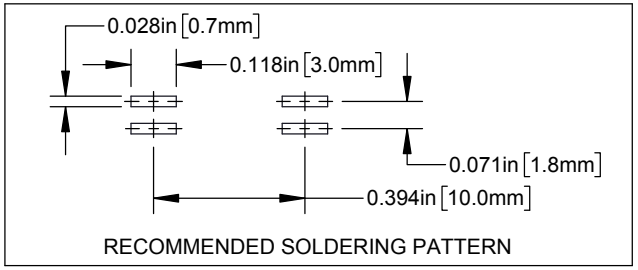


RECOMMENDED SOLDERING PATTERN

| STANDARD TOLERANCE (UNLESS OTHERWISE SPECIFIED) | | | |
|---|---|---|---|
| DECIMALS | | ANGULAR | |
| .X | ± .1 | X° | ± 1° |
| .XX | ± .02 | | |
| .XXX | ± .010 | | |


BIVAR®
4 THOMAS, IRVINE, CA. 92618
TEL: (949) 951-8808 FAX: (949) 951-3974


| | | | |
|---|---|---|---|
| DESIGNED: K. BARON | DATE: 07/11/18 | TITLE: BIVAR LIGHT PIPE SYSTEM SAT VERTICAL, 4MM, SINGLE STATION | |
| | | PART NO: LPV4-XXXXX-XXX | REVISION: B |
| REVISED: N/A | DATE: N/A | CAGE CODE: 32559 | |
| CHECKED: TD. NGUYEN | DATE: 07/11/18 | SCALE: 2:1 | SHEET # 1 OF 5 |

CAD GENERATED DOCUMENT, DO NOT MEASURE DRAWING

| REVISIONS | | | |
|---|---|---|---|
| REV. | DESCRIPTION | DATE | APPROVED |
| | See Sheet 1 | | |

# STANDARD ORDERING INFORMATION

| TABLE A - FLAT FACE LENS | |
|---|---|
| **PART NO.** | **H ± .01** |
| LPV4-0350F-XXX | 0.350 [8.9mm] |
| LPV4-0400F-XXX | 0.400 [10.2mm] |
| LPV4-0450F-XXX | 0.450 [11.4mm] |
| LPV4-0500F-XXX | 0.500 [12.7mm] |
| LPV4-0550F-XXX | 0.550 [14.0mm] |
| LPV4-0600F-XXX | 0.600 [15.2mm] |
| LPV4-0750F-XXX | 0.750 [19.1mm] |
| LPV4-1000F-XXX | 1.000 [25.4mm] |
| LPV4-1250F-XXX | 1.250 [31.8mm] |
| LPV4-1500F-XXX | 1.500 [38.1mm] |
| LPV4-1750F-XXX | 1.750 [44.5mm] |
| LPV4-2000F-XXX | 2.000 [50.8mm] |

| TABLE B - DOME FACE LENS | |
|---|---|
| **PART NO.** | **H ± .01** |
| LPV4-0350D-XXX | 0.350 [8.9mm] |
| LPV4-0400D-XXX | 0.400 [10.2mm] |
| LPV4-0450D-XXX | 0.450 [11.4mm] |
| LPV4-0500D-XXX | 0.500 [12.7mm] |
| LPV4-0550D-XXX | 0.550 [14.0mm] |
| LPV4-0600D-XXX | 0.600 [15.2mm] |
| LPV4-0750D-XXX | 0.750 [19.1mm] |
| LPV4-1000D-XXX | 1.000 [25.4mm] |
| LPV4-1250D-XXX | 1.250 [31.8mm] |
| LPV4-1500D-XXX | 1.500 [38.1mm] |
| LPV4-1750D-XXX | 1.750 [44.5mm] |
| LPV4-2000D-XXX | 2.000 [50.8mm] |

BIVAR®

| PART NO: LPV4-XXXXX-XXX | REVISION: B |
|---|---|
| SCALE: NONE | SHEET # 2 OF 5 |

CAD GENERATED DOCUMENT, DO NOT MEASURE DRAWING

| Order Code XXX | Emitted Color | Peak Wave L. $\lambda_P$ [nm] Chroma TYP | Electro-Optical Data @20mA, 25°C $V_f$ [V] MIN | TYP | MAX | $I_v$ [mcd] TYP | Polarity Diagram |
|---|---|---|---|---|---|---|---|
| R130 | Red | 640 | 1.7 | 2.0 | 2.5 | 130 | FIGURE A |
| R480 | Red | 630 | 1.7 | 2.0 | 2.5 | 480 | FIGURE B |
| A220 | Amber | 610 | 1.7 | 2.0 | 2.5 | 220 | |
| O170 | Orange | 590 | 1.7 | 2.0 | 2.5 | 170 | |
| Y50 | Yellow | 570 | 1.7 | 2.0 | 2.5 | 50 | |
| G850 | Green | 520 | 2.8 | 3.2 | 3.7 | 850 | |
| B150 | Blue | 465 | 2.8 | 3.2 | 3.7 | 150 | |
| W305 | White | X = 0.308 Y = 0.305 | 2.8 | 3.0 | 3.7 | 1750 | |
| OY | Orange | 590 | 1.7 | 2.0 | 2.5 | 190 | FIGURE C |
| | Yellow | 572 | 1.7 | 2.0 | 2.5 | 60 | |
| RY | Red | 640 | 1.7 | 2.0 | 2.5 | 110 | FIGURE D |
| | Yellow | 572 | 1.7 | 2.0 | 2.5 | 55 | |
| RG | Red | 640 | 1.7 | 2.0 | 2.5 | 200 | FIGURE E |
| | Green | 520 | 2.8 | 3.2 | 3.7 | 810 | |
| RW | Red | 630 | 1.7 | 2.0 | 2.5 | 130 | FIGURE F |
| | White | X = 0.28 Y = 0.29 | 2.8 | 3.2 | 3.7 | 520 | |
| RB | Red | 650 | 1.7 | 2.0 | 2.5 | 80 | FIGURE G |
| | Blue | 465 | 2.8 | 3.2 | 3.7 | 150 | |
| RGB | Red | 643 | 1.7 | 2.0 | 2.5 | 95 | FIGURE H |
| | Green | 515 | 2.8 | 3.3 | 3.7 | 730 | |
| | Blue | 460 | 2.8 | 3.3 | 3.7 | 120 | |

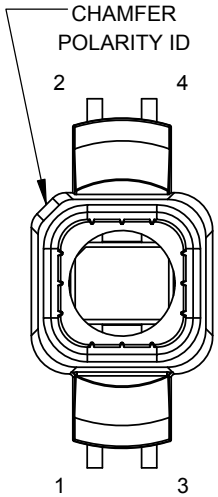


Note: 10% Duty Cycle, Pulse Width ≤ 0.1msec for Peak If.

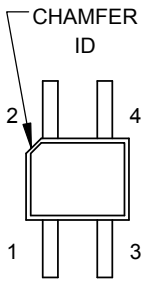


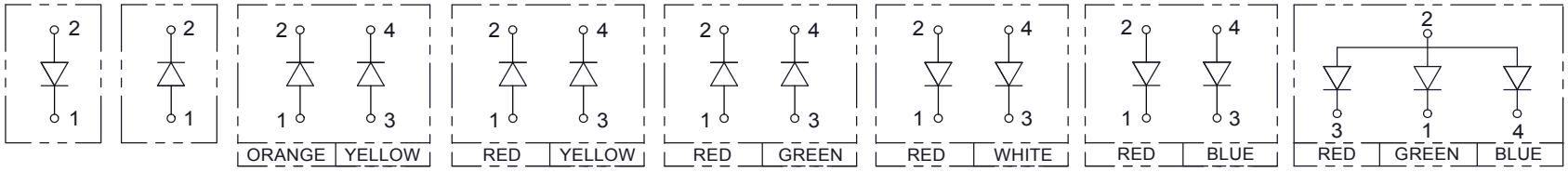


FIG. A FIG. B FIG. C FIG. D FIG. E FIG. F FIG. G FIG. H

BIVAR®

| PART NO: LPV4-XXXXX-XXX | REVISION: B |
|---|---|
| SCALE: 2:1 | SHEET # 3 OF 5 |

CAD GENERATED DOCUMENT, DO NOT MEASURE DRAWING

## PACKAGING PLAN

PARTS ARE SHIPPED IN QUANTITY OF 400 AS IN THE FOLLOWING:

1. ONE BAG CONTAINING FOUR LIGHT PIPE PACKAGES, 100 EACH, AND ONE LEVEL 4 MOISTURE SEALED TRAY WITH 400 SURFACE MOUNT ADAPTERS.
2. BAG SIZE IS APPROXIMATLY 16 X 18 INCHES (406.4 X 457.2 mm).
3. TRAY SIZE IS APPROXIMATELY 10 X 14 X 0.6 INCHES (254 X 355.6 X 15.2 mm), INCLUDING TOP COVER AND BOTTOM TRAY. ADAPTERS ARE ARRANGED AS SHOWN IN FIGURE 1.

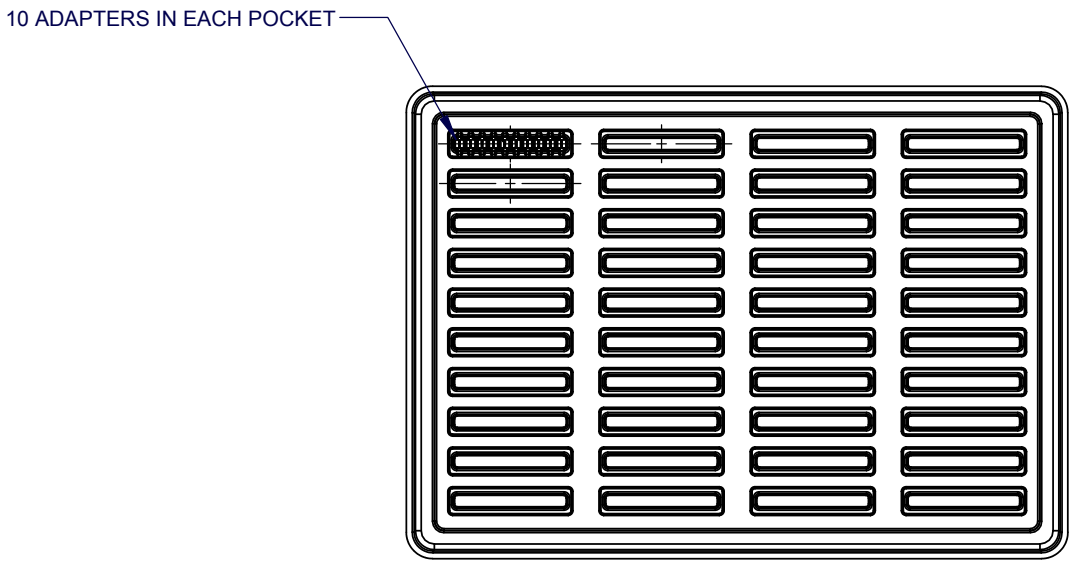


FIGURE 1
BOTTOM TRAY
4 X 10 POCKETS

| | |
|---|---|
| BIVAR® | |
| PART NO: LPV4-XXXXX-XXX | REVISION: B |
| SCALE: NONE | SHEET # 4 OF 5 |
| CAD GENERATED DOCUMENT, DO NOT MEASURE DRAWING | |

RECOMMENDED REFLOW SOLDERING PROFILE

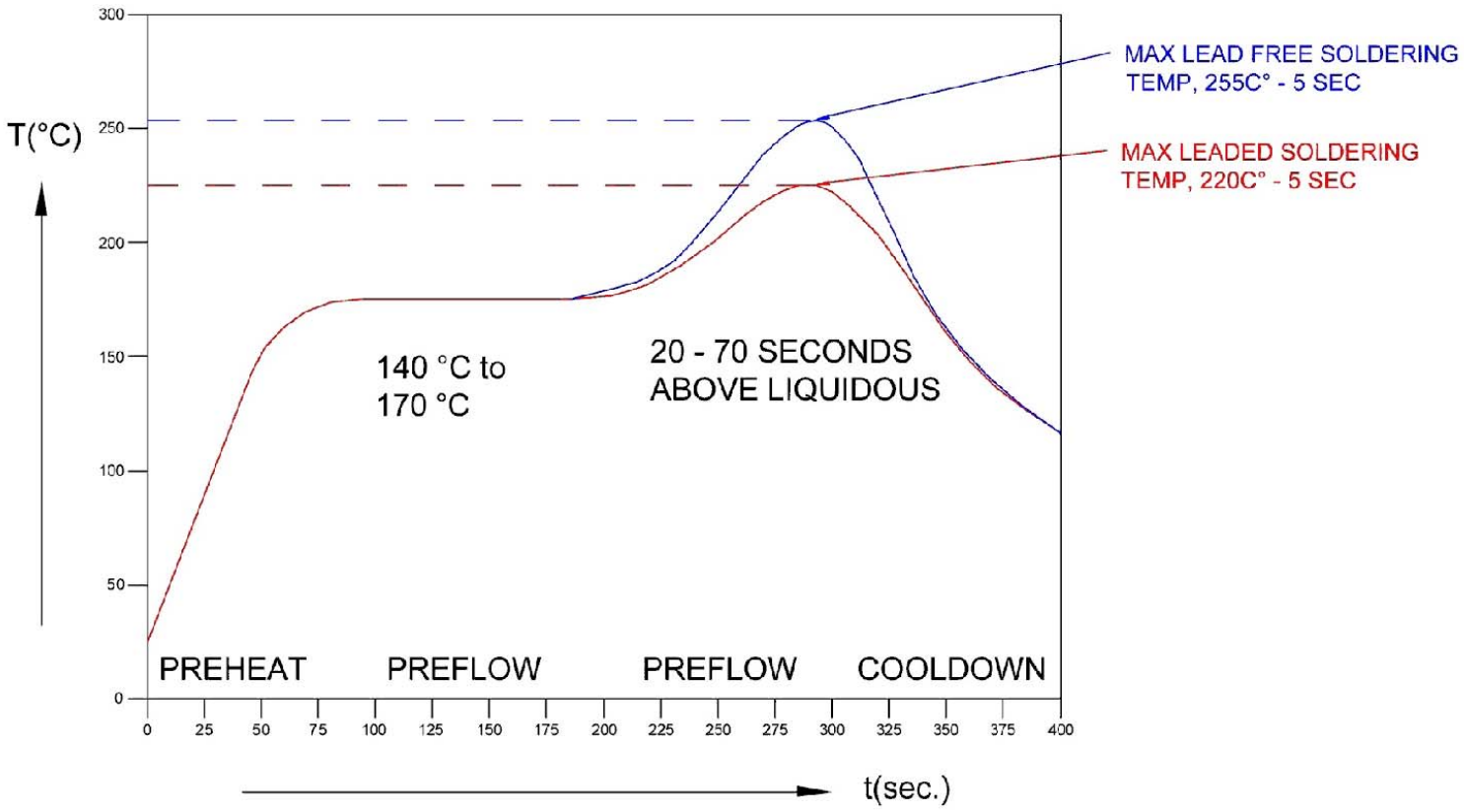


NOTE:
1. DO NOT CLEAN AFTER SOLDERING. ONLY USE NO-CLEAN SOLDER PASTE.

| | |
|---|---|
| BIVAR® | |
| PART NO: LPV4-XXXXX-XXX | REVISION: B |
| SCALE: NONE | SHEET # 5 OF 5 |
| CAD GENERATED DOCUMENT, DO NOT MEASURE DRAWING | |