DASH NO.	APPLICATION		REVISIONS			
	NEXT ASSY.	USED ON	LTR	ECO#	DESCRIPTION	DATE
	n/a	HS35	H	9661	ADD −512, −551 & −591 DASH NO.	11/30/15

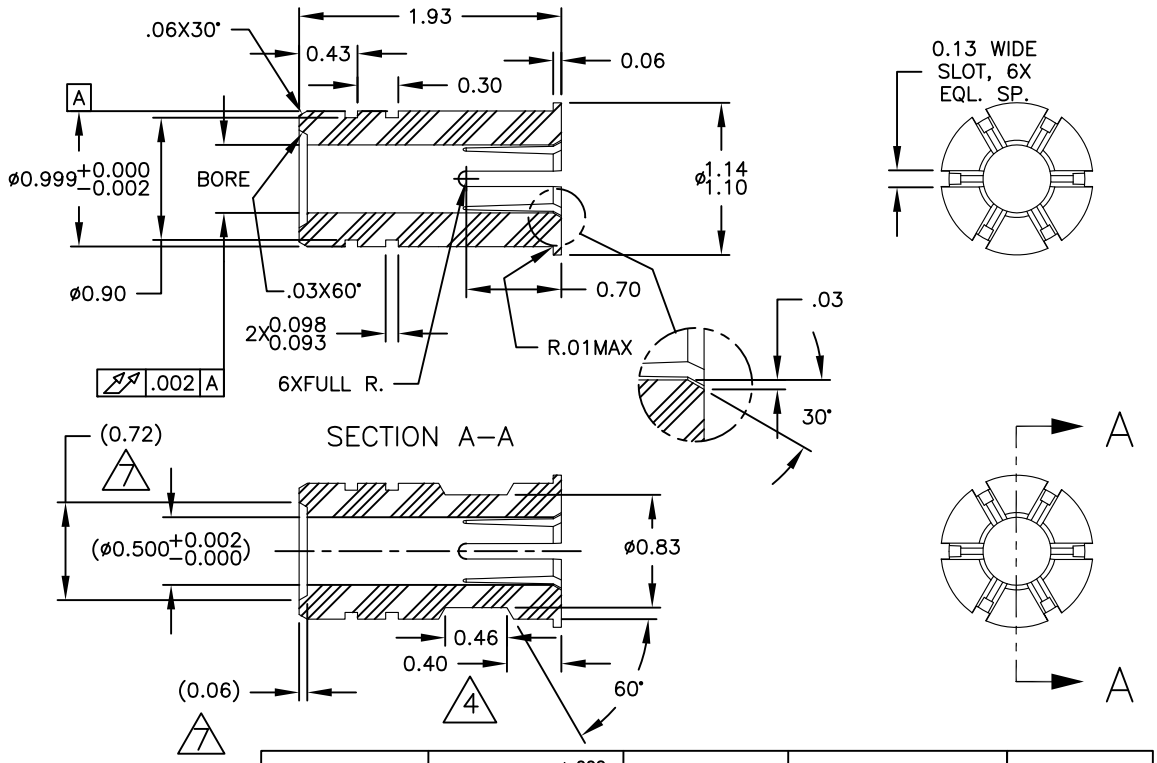

DASH NO.	BORE $^{+.002}_{-.000}$	GO GAGE	NO−GO GAGE	REF ONLY
−500	0.500	0.5000 (−)	0.5020 (−)	½ in.
−512	0.5125	0.5125 (−)	0.5145 (−)	13 mm
−551	0.552	0.5520 (−)	0.5540 (−)	14 mm
−591	0.591	0.5910 (−)	0.5930 (−)	15 mm
−625	0.625	0.6250 (−)	0.6270 (−)	5/8 in.
−630	0.631	0.6310 (−)	0.6330 (−)	16 mm
−709	0.7085	0.7085 (−)	0.7105 (−)	18 mm
−750	0.750	0.7500 (−)	0.7520 (−)	¾ in.
−789	0.788	0.7880 (−)	0.7900 (−)	20 mm

NOTES:
1. MATERIAL:PHILLIPS RYTON R4, BLACK, VIRGIN. ALT. MATERIAL: DELRIN 150
2. INSIDE RADIUS, .015 MIN.
3. GO/NO−GO GAGE PIN SIZES FOR INSPECTION REFERENCE
4. THIS FEATURE APPLIES TO −500, −521, −551 AND −591.
5. MUST INSPECT BORE SIZE PER 08202−001 PROCEDURE.
6. OTHER DASH NUMBERS ARE ON SEPARATE DRAWINGS
7. MAY BE MADE FROM 32044−TAB PART BY MACHINING THESE FEATURES ONLY. OTHERWISE COUNTERBORE FEATURE NOT REQUIRED.

MATERIAL/FINISH: See Notes

APPROVALS	DATE
DRAWN KRB	02/07/07
APPR Mat Bagneski	

Digitally signed by Mat Bagneski DN: cn=Mat Bagneski, o=BEI Sensors, ou=Engineering, email=mat.bagneski@beisensors.com, c=US Date: 2016.06.28 07:48:45 -07'00'

UNLESS OTHERWISE SPECIFIED, DIMENSIONS ARE IN INCHES, APPLY AND APPLY AFTER FINISH
.XX ±.01 .XXX ±.005
ANGLES ±0° 30'
ALL DIA. TO BE ◎ WITHIN .010

THESE COMMODITIES, TECHNOLOGY OR SOFTWARE IF EXPORTED FROM THE UNITED STATES MUST BE IN ACCORDANCE WITH THE BUREAU OF INDUSTRY, EXPORT ADMINISTRATION REGULATIONS. DIVERSION CONTRARY TO U.S. LAW IS PROHIBITED.

THIS DOCUMENT CONTAINS PROPRIETARY INFORMATION OF BEI SENSORS. ANY REPRODUCTION, USE OR DISCLOSURE OF THIS DOCUMENT WITHOUT WRITTEN CONSENT OF BEI SENSORS IS EXPRESSLY PROHIBITED.

BEI SENSORS
7230 Hollister Ave.
Goleta, Ca 93117−2891
Tel: (805) 968−0782
Fax: (805) 968−3154

TITLE BUSHING, INSULATOR, THRU HS35

SIZE	CAGE CODE	DWG NO.	REV.
A	1RB90	32043−TAB	H

SCALE: NONE | FILE: 32043−TAB_H | SHEET 1 OF 1