19-2254; Rev 3; 4/09

1A Current-Limited Switch for 2 USB Ports

General Description

The MAX1922 current-limited 70mΩ switch with built-in fault blanking provides an accurate, preset 1.4A to 2.1A current limit, making it ideal for dual USB applications. Its low quiescent supply current (16µA) and standby current (1µA) conserve battery power in portable applications. The MAX1922 operates with inputs from 2.7V to 5.5V, making it ideal for both 3V and 5V systems.

An overcurrent signal ($\overline{OC}$) notifies the microprocessor that the internal current limit has been reached. A 10ms overcurrent-blanking feature allows momentary faults (such as those caused when hot-swapping into a capacitive load) to be ignored, thus preventing false alarms to the host system. This blanking also prevents an $\overline{OC}$ signal from being issued when the device is powering up.

The MAX1922 has several safety features to ensure that the USB port is protected. Built-in thermal-overload protection limits power dissipation and junction temperature. The device also has accurate internal current-limiting circuitry to protect the input supply against overload.

The MAX1922 is offered in a space-saving 8-pin SO package and a 10-pin TDFN package and operates over the extended (-40°C to +85°C) temperature range.

Applications

Notebook Computers

USB Ports

USB Hubs

Docking Stations

Features

- **Accurate Current Limit (1.4A min, 2.1A max)**
- **10ms Internal $\overline{OC}$ Blanking Timeout**
- **$\overline{OC}$ Blanking During Power-Up**
- **125mΩ (max) High-Side MOSFET**
- **Short-Circuit and Thermal Protection with Overcurrent Logic Output**
- **Undervoltage Lockout**
- **16µA Quiescent Supply Current**
- **1µA (max) Standby Supply Current**
- **2.7V to 5.5V Supply Range**
- **UL Recognized: UL# E211395**

Ordering Information

PART	TEMP RANGE	PIN-PACKAGE	TOP MARK
MAX1922ESA+	-40°C to +85°C	8 SO	—
MAX1922ETB+	-40°C to +85°C	10 TDFN-EP*	AQQ

*EP = Exposed paddle.

+Denotes a lead(Pb)-free/RoHS-compliant package.

Pin Configurations

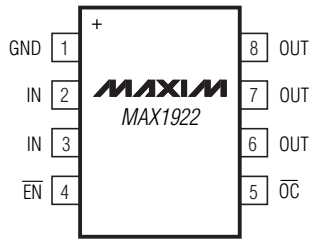

Pin Configurations continued at end of data sheet.

Typical Operating Circuit

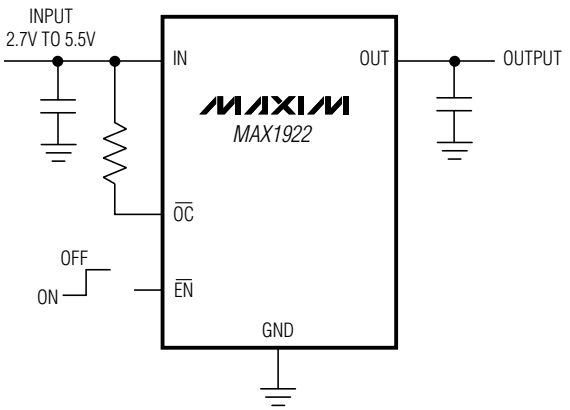

For pricing, delivery, and ordering information, please contact Maxim Direct at 1-888-629-4642, or visit Maxim's website at www.maxim-ic.com.

1A Current-Limited Switch for 2 USB Ports

ABSOLUTE MAXIMUM RATINGS

IN, $\overline{EN}$, $\overline{OC}$ to GND .....-0.3V to +6V
OUT to GND .....-0.3V to (V_{IN} + 0.3V)
Maximum Switch Current.....2.3A (internally limited)
OUT Short-Circuit to GND .....Continuous

Continuous Power Dissipation (T_A = +70°C)
8-Pin SO (derate 5.88mW/°C above +70°C).....471mW
10-Pin TDFN (derate 18.5mW/°C above +70°C) 1481mW
Operating Temperature Range (extended).....-40°C to +85°C
Storage Temperature Range .....-65°C to +150°C
Lead Temperature (soldering, 10s) .....+300°C

Stresses beyond those listed under "Absolute Maximum Ratings" may cause permanent damage to the device. These are stress ratings only, and functional operation of the device at these or any other conditions beyond those indicated in the operational sections of the specifications is not implied. Exposure to absolute maximum rating conditions for extended periods may affect device reliability.

ELECTRICAL CHARACTERISTICS

(V_{IN} = 5V, **T_A = 0°C to +85°C,** unless otherwise noted. Typical values are at T_A = +25°C.)

PARAMETER	SYMBOL	CONDITIONS		MIN	TYP	MAX	UNITS
OPERATING CONDITION							
Input Voltage	V_{IN}			2.7		5.5	V
POWER SWITCH							
Switch Static Drain-Source On-State Resistance	$R_{DS(ON)}$	T_A = +25°C	V_{IN} = 4.4V to 5.5V		70	100	mΩ
		T_A = 0°C to +85°C	V_{IN} = 4.4V to 5.5V			125	
			V_{IN} = 3V		72	150	
Switch Turn-On Time	t_{ON}	I_{LOAD} = 400mA			80	200	µs
Switch Turn-Off Time	t_{OFF}	I_{LOAD} = 400mA		3	6	20	µs
ENABLE INPUT ($\overline{EN}$)							
$\overline{EN}$ High-Level Input Voltage	V_{IH}	V_{IN} = 2.7V to 3.6V		2.0			V
		V_{IN} = 3.7V to 5.5V		2.4			
$\overline{EN}$ Low-Level Input Voltage	V_{IL}	V_{IN} = 2.7V to 5.5V				0.8	V
$\overline{EN}$ Input Current		$V_{\overline{EN}}$ = V_{IN} or GND		-1		1	µA
Startup Time		V_{IN} = 5V, C_{OUT} = 150µF from $\overline{EN}$ driven low to 50% full V_{OUT}			1		ms
CURRENT LIMIT							
Overload Output Current	I_{LIMIT}	Force V_{OUT} to 4.5V		1.4	1.75	2.1	A
Short-Circuit Output Current	I_{SC}	OUT shorted to GND			1	1.4	A
SUPPLY CURRENT							
Supply Current, Low-Level Input		$V_{\overline{EN}}$ = V_{IN} = V_{OUT} = 5.5V			0.002	1	µA
Supply Current, High-Level Input	I_Q	$V_{\overline{EN}}$ = 0, I_{OUT} = 0	Timer not running		16	25	µA
			Timer running		35		
Supply-Leakage Current		$V_{\overline{EN}}$ = V_{IN} = 5.5V, V_{OUT} = 0	T_A = +25°C		0.01	2	µA
			T_A = 0°C to +85°C			15	
UNDERVOLTAGE LOCKOUT							
Undervoltage Lockout	UVLO	Rising edge, 100mV hysteresis		2.0	2.4	2.6	V
OVERCURRENT ($\overline{OC}$)							
$\overline{OC}$ Threshold				1.1			A
$\overline{OC}$ Output Low Voltage	V_{OL}	I_{SINK} = 1mA, V_{IN} = 3V				0.4	V

ELECTRICAL CHARACTERISTICS (continued)

(V_{IN} = 5V, **T_A = 0°C to +85°C,** unless otherwise noted. Typical values are at T_A = +25°C.)

PARAMETER	SYMBOL	CONDITIONS	MIN	TYP	MAX	UNITS
$\overline{OC}$ Off-State Current		V_{IN} = $V_{\overline{OC}}$ = 5V			1	µA
$\overline{OC}$ Blanking Timeout Period	t_{BL}	From overcurrent condition to $\overline{OC}$ assertion	6	10	13	ms
THERMAL SHUTDOWN						
Thermal Shutdown Threshold				165		°C

ELECTRICAL CHARACTERISTICS

(V_{IN} = 5V, **T_A = -40°C to +85°C,** unless otherwise noted.) (Note 1)

PARAMETER	SYMBOL	CONDITIONS	MIN	TYP	MAX	UNITS
OPERATING CONDITION						
Input Voltage	V_{IN}		3.0		5.5	V
POWER SWITCH						
Switch Static Drain-Source On-State Resistance	$R_{DS(ON)}$	V_{IN} = 4.4V to 5.5V			125	mΩ
		V_{IN} = 3V			150	
Switch Turn-On Time	t_{ON}	I_{LOAD} = 400mA			200	µs
Switch Turn-Off Time	t_{OFF}	I_{LOAD} = 400mA	1		20	µs
ENABLE INPUT ($\overline{EN}$)						
$\overline{EN}$ High-Level Input Voltage	V_{IH}	V_{IN} = 3.0V to 3.6V	2.0			V
		V_{IN} = 3.7V to 5.5V	2.4			
$\overline{EN}$ Low-Level Input Voltage	V_{IL}	V_{IN} = 3.0V to 5.5V			0.8	V
$\overline{EN}$ Input Current		$V_{\overline{EN}}$ = V_{IN} or GND	-1		1	µA
CURRENT LIMIT						
Overload Output Current	I_{LIMIT}	Force V_{OUT} to 4.5V	1.2		2.3	A
Short-Circuit Output Current	I_{SC}	OUT shorted to GND			1.5	A
SUPPLY CURRENT						
Supply Current, Low-Level Input		$V_{\overline{EN}}$ = V_{IN} = V_{OUT} = 5.5V			2	µA
Supply Current, High-Level Input	I_Q	$V_{\overline{EN}}$ = GND, I_{OUT} = 0, timer not running			25	µA
Supply Leakage Current		$V_{\overline{EN}}$ = V_{IN} = 5.5V, V_{OUT} = GND			15	µA
UNDERVOLTAGE LOCKOUT						
Undervoltage Lockout	UVLO	Rising edge, 100mV hysteresis	2.0		2.9	V
OVERCURRENT ($\overline{OC}$)						
$\overline{OC}$ Threshold			1.1			A
$\overline{OC}$ Output Low Voltage	V_{OL}	I_{SINK} = 1mA, V_{IN} = 3V			0.4	V
$\overline{OC}$ Off-State Current		V_{IN} = $V_{\overline{OC}}$ = 5V			1	µA
$\overline{OC}$ Blanking Timeout Period	t_{BL}	From overcurrent condition to $\overline{OC}$ assertion	6		14	ms

Note 1: Specifications to -40°C are guaranteed by design, not production tested.

1A Current-Limited Switch for 2 USB Ports

Typical Operating Characteristics

(Circuit of Figure 2, V_{IN} = 5V, T_A = +25°C, unless otherwise noted.)

QUIESCENT CURRENT vs. INPUT VOLTAGE

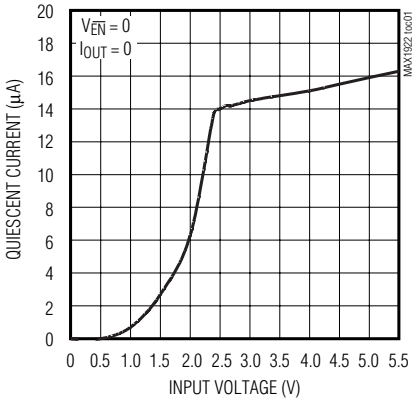

QUIESCENT CURRENT vs. TEMPERATURE

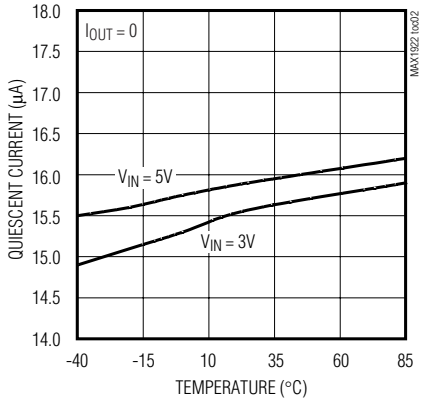

OFF SUPPLY CURRENT vs. TEMPERATURE

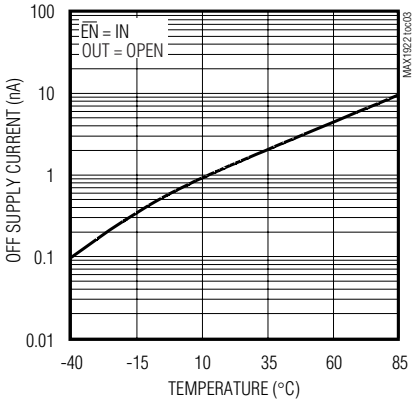

OFF SWITCH CURRENT vs. TEMPERATURE

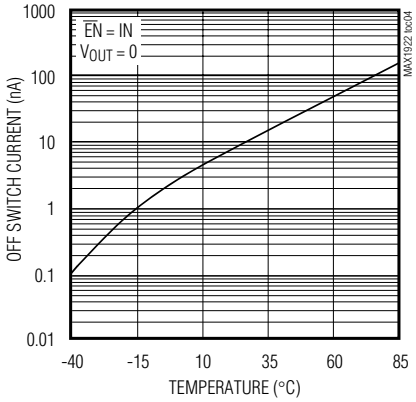

NORMALIZED ON-RESISTANCE vs. TEMPERATURE

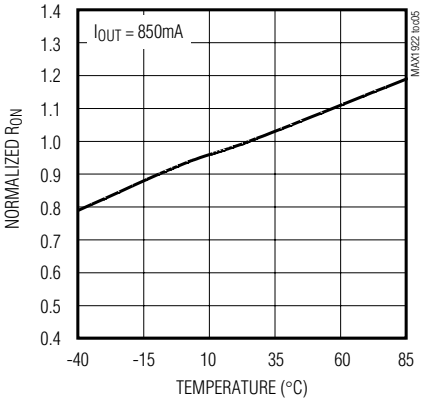

NORMALIZED OUTPUT CURRENT vs. OUTPUT VOLTAGE

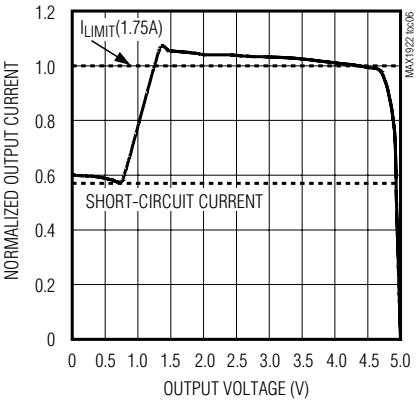

TURN-ON TIME vs. TEMPERATURE

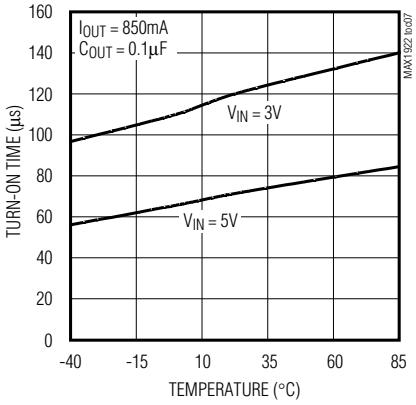

TURN-OFF TIME vs. TEMPERATURE

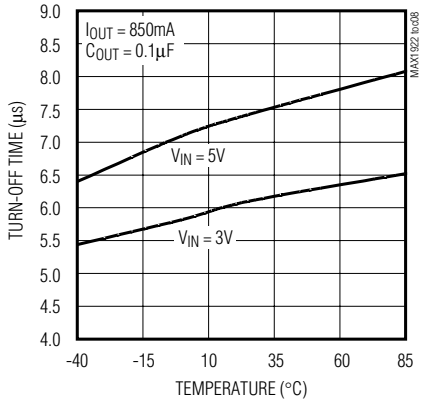

$\overline{OC}$ BLANKING TIMEOUT vs. TEMPERATURE

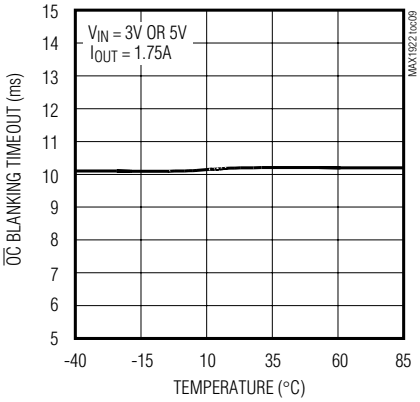

Typical Operating Characteristics (continued)

(Circuit of Figure 2, V_{IN} = 5V, T_A = +25°C, unless otherwise noted.)

CURRENT-LIMIT AND $\overline{OC}$ RESPONSE

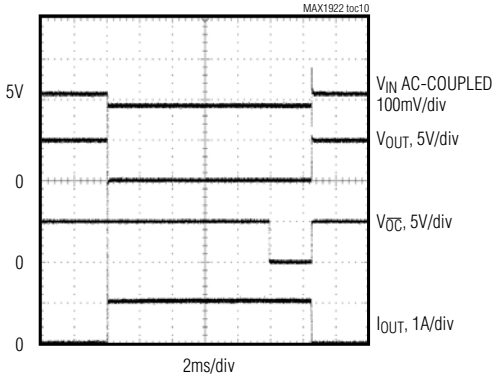

CURRENT-LIMIT RESPONSE

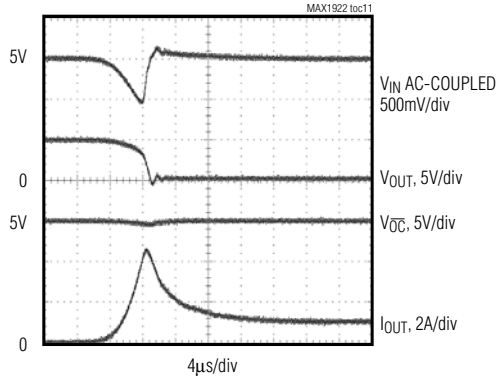

SWITCH TURN-ON TIME

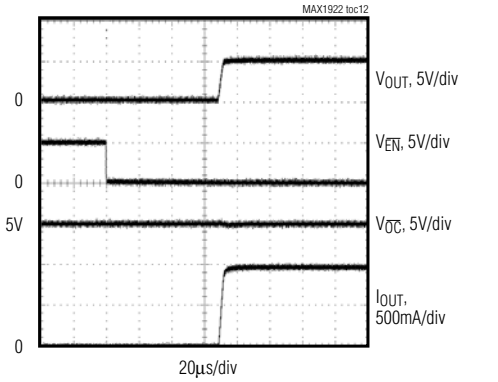

SWITCH TURN-OFF TIME

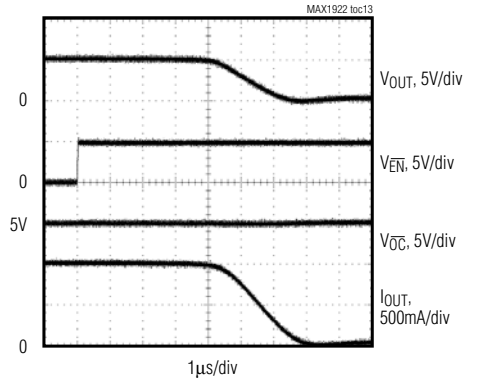

STARTUP TIME (TYPICAL USB APPLICATION)

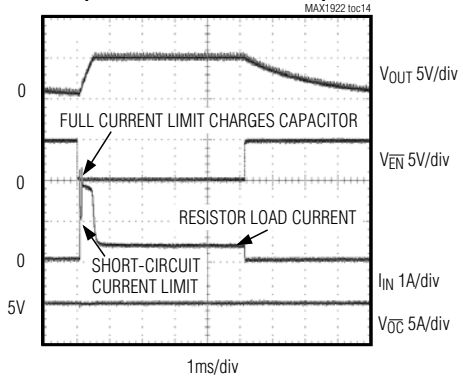

1A Current-Limited Switch for 2 USB Ports

Pin Description

PACKAGE		NAME	FUNCTION
TDFN	SO		
6	1	GND	Ground
1, 3, 9	2, 3	IN	Input. p-channel MOSFET source—connect all IN pins together and bypass with a 1µF capacitor ground.
5	4	$\overline{EN}$	Active-Low Switch Enable Input. A logic-low turns on the switch.
7	5	$\overline{OC}$	Overcurrent-Indicator Output. This open-drain output goes low when the device is in thermal shutdown or undervoltage lockout, or during a sustained (10ms) current-limit condition.
2, 4, 8, 10	6, 7, 8	OUT	Switch Output. p-channel MOSFET drain—connect all OUT pins together and bypass with a 0.1µF capacitor to ground.
—	—	EP	TDFN Only. Exposed paddle. Connect to the GND plane for optimum thermal dissipation. This does not remove the requirement for a proper ground.

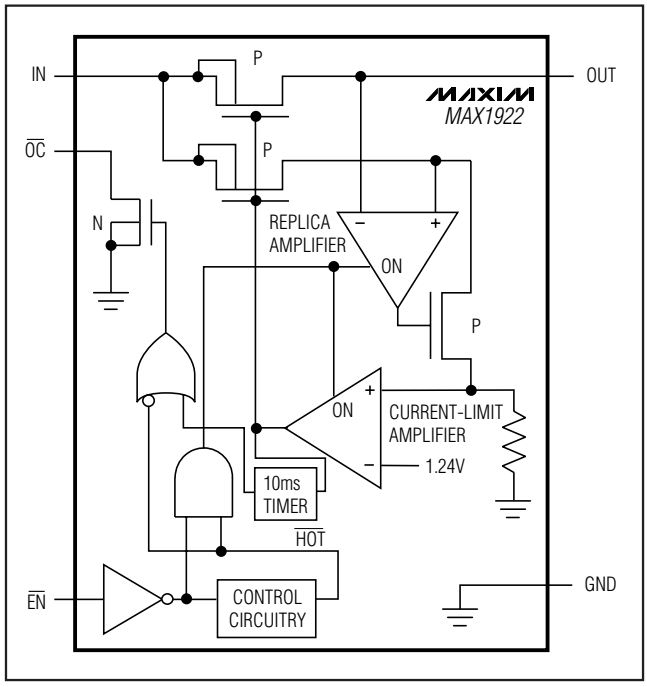

Figure 1. Functional Diagram

Detailed Description

The MAX1922 p-channel MOSFET power switch limits output current to 1.4A min and 2.1A max. When the output current increases beyond the current limit (I_{LIMIT}), the current also increases through the replica switch (I_{OUT} / 13000). The current-limit error amplifier compares the voltage to the internal 1.24V reference and regulates the current back to the I_{LIMIT} (Figure 1).

These switches are not bidirectional; therefore, the input voltage must be higher than the output voltage.

Continuous Short-Circuit Protection

The MAX1922 is a short-circuit-protected switch. In the event of an output short-circuit condition, the current through the switch is foldback-current-limited to 1A continuous.

Thermal Shutdown

The MAX1922 has a thermal shutdown feature. The switch turns off and the $\overline{OC}$ output goes low immediately (no overcurrent blanking) when the junction temperature exceeds +165°C. When the MAX1922 cools 20°C, the switch turns back on. If the fault short-circuit condition is not removed, the switch cycles on and off, resulting in a pulsed output.

$\overline{OC}$ Indicator

The MAX1922 provides an overcurrent output ($\overline{OC}$). A 100kΩ pullup resistor from $\overline{OC}$ to IN provides a logic control signal. This open-drain output goes low when any of the following conditions occur:

- The input voltage is below the 2.4V undervoltage lockout (UVLO) threshold.
- The die temperature exceeds the thermal shutdown temperature limit of +165°C.
- The device is in current limit for greater than 10ms.

$\overline{OC}$ Blanking

The MAX1922 features 10ms overcurrent blanking. Blanking allows brief current-limit faults, including momentary short-circuit faults that occur when hot-swapping a capacitive load, and ensures that no $\overline{OC}$ is issued during power-up. When a load transient causes the device to enter current limit, an internal counter starts. If the load fault persists beyond the 10ms overcurrent blanking timeout, the $\overline{OC}$ output asserts low. Ensure that the MAX1922 input is adequately bypassed to prevent input glitches from triggering spurious $\overline{OC}$

outputs. Input voltage glitches less than 150mV do not cause a spurious $\overline{OC}$ output. Load-transient faults less than 10ms (typ) will not cause an $\overline{OC}$ output assertion.

Only current-limit faults are blanked. Die overtemperature faults and input voltage droops below the UVLO threshold will cause an immediate $\overline{OC}$ output.

Applications Information

Input Capacitor

To limit the input voltage drop during momentary output short-circuit conditions, connect a capacitor from IN to GND. A 1µF ceramic capacitor is adequate for most applications; however, higher capacitor values further reduce the voltage drop at the input (Figure 2).

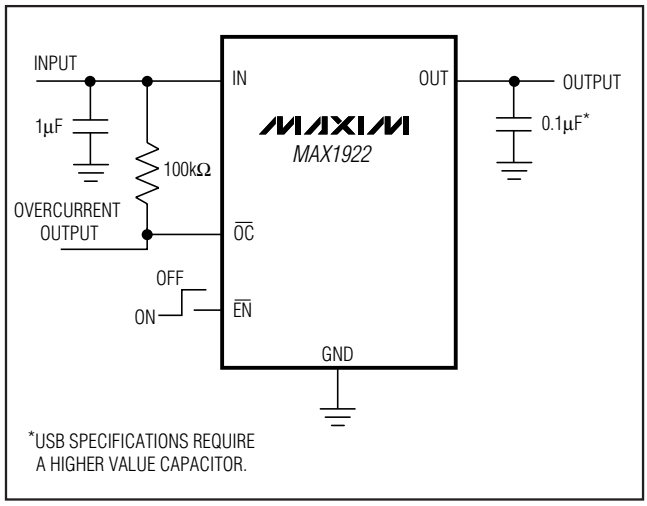

Figure 2. Typical Application Circuit

Output Capacitor

Connect a 0.1µF capacitor from OUT to GND. This capacitor helps to prevent inductive parasitics from pulling OUT negative during turn-off.

Layout and Thermal Dissipation

Important: Optimize the switch response time to output short-circuit conditions by keeping all traces as short as possible to reduce the effect of undesirable parasitic inductance. Place input and output capacitors as close as possible to the device (no more than 5mm away). All IN and OUT pins must be connected with short traces to the power bus. Wide power-bus planes provide superior heat dissipation through the MAX1922's IN and OUT pins. Under normal operating conditions, the package can dissipate and channel heat away. Calculate the maximum power dissipation as follows:

$$P = (I_{LIMIT})^2 \times R_{ON}$$

where I_{LIMIT} is the preset current limit (2.1A max) and R_{ON} is the on-resistance of the switch (125mΩ max).

When the output is short circuited, foldback-current limiting activates and the voltage drop across the switch equals the input supply voltage. The power dissipated across the switch increases, as does the die temperature. If the fault condition is not removed, the thermal-overload protection circuitry activates (see *Thermal Shutdown* section). Wide power-bus planes connected to IN and OUT and a ground plane in contact with the device help dissipate additional heat.

Driving Inductive Loads

A wide variety of devices (mice, keyboards, cameras, and printers) can load the USB port. These devices commonly connect to the port with cables, which can add an inductive component to the load. This inductance causes the output voltage at the USB port to ring during a load step. The MAX1922 is capable of driving inductive loads, but avoid exceeding the device's absolute maximum ratings. Usually the load inductance is relatively small, and the MAX1922 input includes a substantial bulk capacitance from an upstream regulator as well as local bypass capacitors, limiting overshoot. If severe ringing occurs due to large load inductance, clamp the MAX1922 output below 6V and above -0.3V.

1A Current-Limited Switch for 2 USB Ports

Pin Configurations (continued)

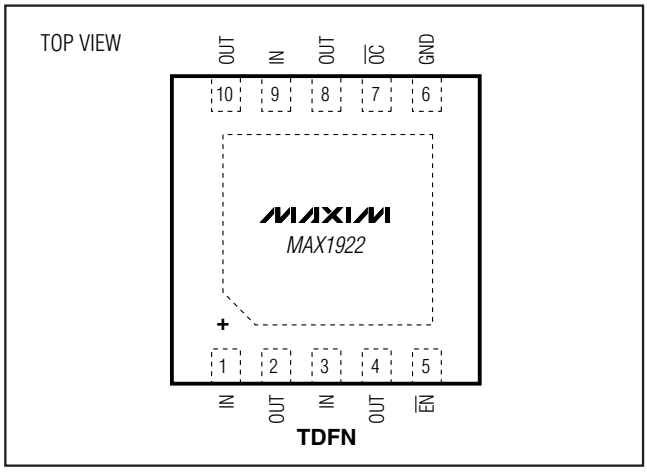

Chip Information

PROCESS: BiCMOS

Package Information

For the latest package outline information and land patterns, go to **www.maxim-ic.com/packages**.

PACKAGE TYPE	PACKAGE CODE	DOCUMENT NO.
8 SO	S8-5	21-0041
10 TDFN-EP	T1033-1	21-0137

Revision History

REVISION NUMBER	REVISION DATE	DESCRIPTION	PAGES CHANGED
3	4/09	Fixed typo in UL #	1

Maxim cannot assume responsibility for use of any circuitry other than circuitry entirely embodied in a Maxim product. No circuit patent licenses are implied. Maxim reserves the right to change the circuitry and specifications without notice at any time.

© 2009 Maxim Integrated Products Maxim is a registered trademark of Maxim Integrated Products, Inc.