53TP Series IP00

- Three-phase solid-state relay; Ratings 25 A, 50 A per phase @ 48-530 VAC
- 2 package styles IP00 or IP20 (See IP20 spec sheet for more information)
- SCR output for heavy industrial loads
- Transient protection built in
- AC or DC control
- Zero-crossing (resistive loads) or random-fire (inductive loads) output
- LED input status indicator
- UL Recognized, CE Compliant to EN60950-1

PRODUCT SELECTION

Control Voltage	25 A	50 A
90-280 VAC	A53TP25D	A53TP50D
4-32 VDC	D53TP25D	D53TP50D

AVAILABLE OPTIONS

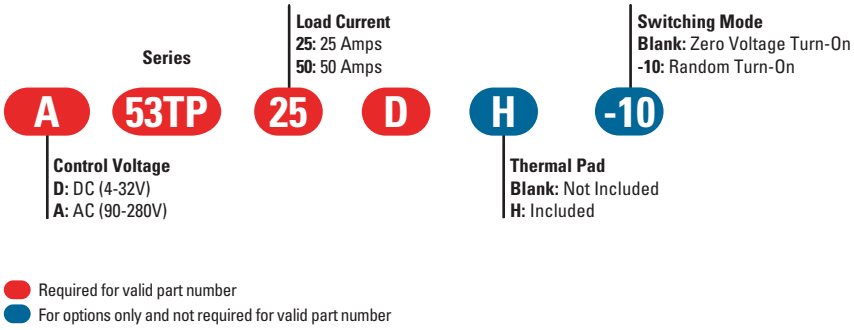

OUTPUT SPECIFICATIONS AC Output (1)

Description	25 A	50 A
Operating Voltage (47-63Hz) [Vrms]	48-530	48-530
Transient Overvoltage [Vpk] (2)	1200	1200
Maximum Off-State Leakage Current @ Rated Voltage [mArms]	10	10
Minimum Off-State dv/dt @ Maximum Rated Voltage [V/µsec] (3)	500	500
Maximum Load Current [Arms] (4)	25	50
Minimum Load Current [Arms]	0.05	0.05
Maximum Surge Current 50-60 Hz (16.6ms) [Apk]	239/250	597/625
Maximum On-State Voltage Drop @ Rated Current [Vpk]	1.6	1.6
Thermal Resistance Junction to Case (Rjc) [°C/W]	1.02	0.63
Maximum I^2t for Fusing 50-60 Hz (8.3 msec) [A^2 sec]	285/260	1779/1620
Minimum Power Factor (with Maximum Load)	0.5	0.5

Copyright © 2017 Crydom Inc. Specifications subject to change without notice.

INPUT SPECIFICATIONS (1)

Description	D53	A53
Control Voltage Range	4-32 VDC	90-280 Vrms
Minimum Turn-On Voltage	4.0 VDC	90 Vrms
Minimum Turn-Off Voltage	1.0 VDC	10 Vrms
Minimum Input Current (for on-state)	19 mA @ 4V	2.2 mA @ 120V
Maximum Input Current	25 mA @ 32V	10mA @ 240V
Nominal Input Impedance	Current Limiter	Current Limiter
Maximum Turn-On Time [msec] (5)	1/2 Cycle	50
Maximum Turn-Off Time [msec]	1/2 Cycle	50

GENERAL SPECIFICATIONS (1)

Description	Parameters
Dielectric Strength, Input/Output/Base (50/60Hz)	4000 Vrms
Minimum Insulation Resistance (@ 500 V DC)	10^9 Ohms
Maximum Capacitance, Input/Output	8 pF
Ambient Operating Temperature Range	-40°C to 80°C
Ambient Storage Temperature Range	-40°C to 125°C
Weight (typical)	10.3 oz (315g)
Encapsulation	Thermally conductive Epoxy
Terminals	Nickel plated Brass
Screws and Saddle clamps	Zinc plated Steel
Input Terminal Screw Torque Range:[in lbs/Nm]	8-10 / 0.9-1.1
Output Terminal Screw Torque Range:[in lbs/Nm]	15-20 / 1.7-2.2

GENERAL NOTES

1) All parameters at 25°C unless otherwise specified.
2) Relay will self trigger between 900-1200 Vpk.
3) Off-State dv/dt test method per EIA/NARM standard RS-443, paragraph 13.11.1
4) Heat sinking required, see page 4 for derating curves.
5) Turn-on time for Random turn-on versions is 0.02 msec (DC Control Models)

Copyright © 2017 Crydom Inc. Specifications subject to change without notice.

THERMAL DERATE INFORMATION

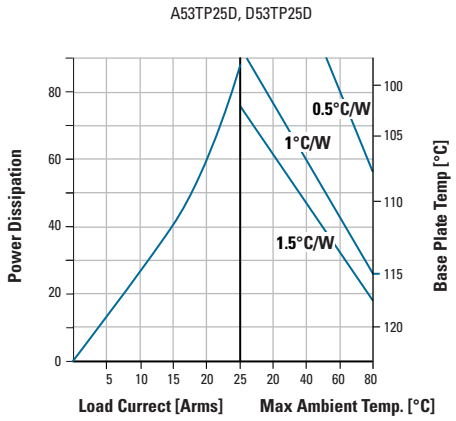

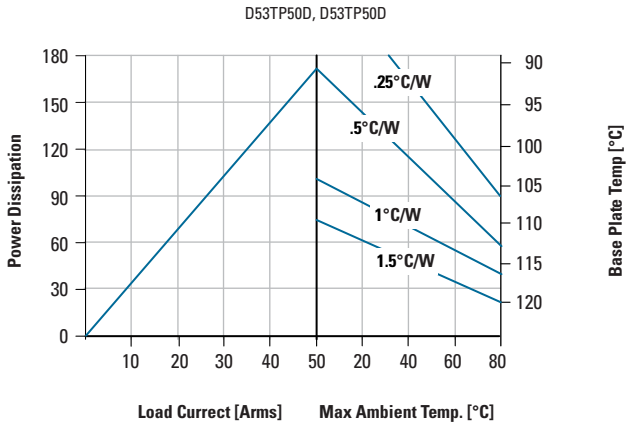

WIRING DIAGRAM

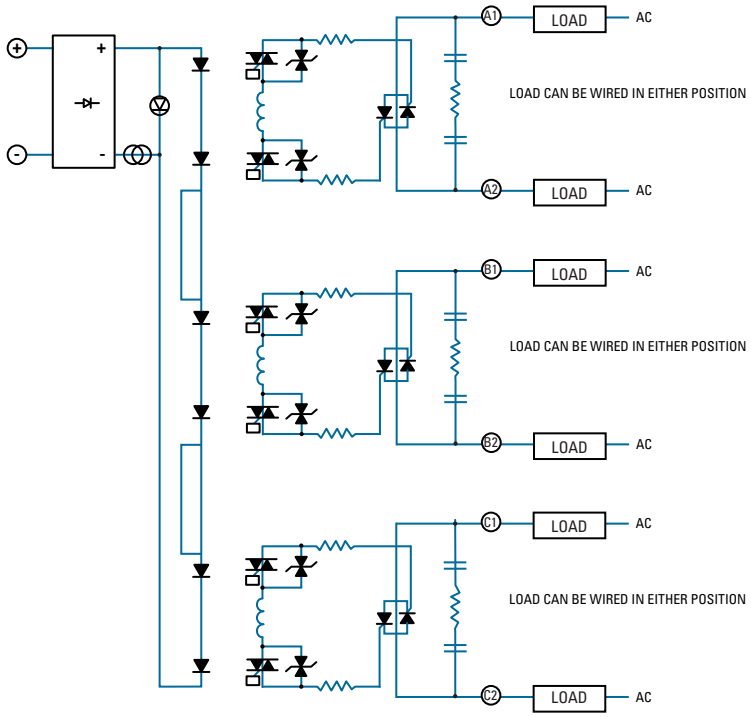

Copyright © 2017 Crydom Inc. Specifications subject to change without notice.

MECHANICAL SPECIFICATIONS

Tolerances: ±0.02 in / 0.5 mm
All dimensions are in: inches [millimeters]

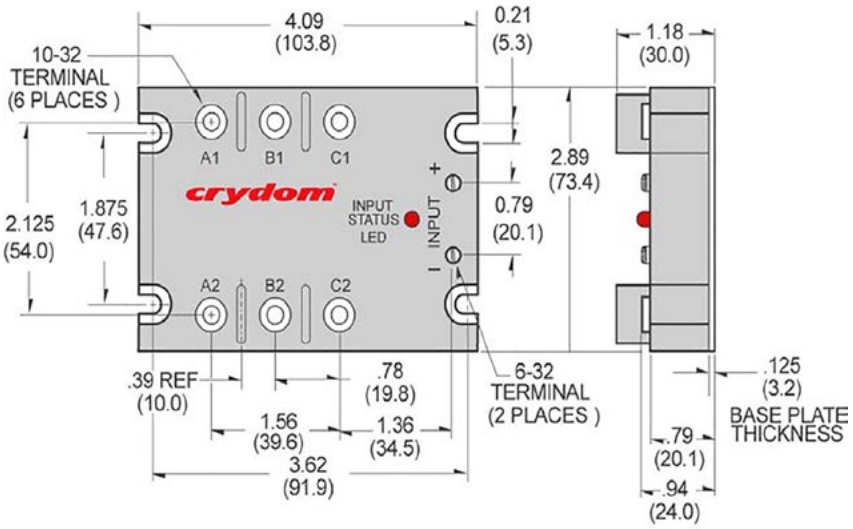

AGENCY APPROVALS

Agency Approvals

Input:
EN61000-4-2, Level 3 ESD
EN61000-4-4, Level 3 Burst
Output:
EN61000-4-2, Level 4 ESD
EN61000-4-4, Level 4 Burst
EN61000-4-5, Level 4 Surge
EN60950: Meets the requirements of sections 1.5: 1,7 : 2.9: 2.10.5.3: 4.2: 4.5: 4.7:

c UL us E116950 LR 81689

CE RoHS VDE REG.- Nr. 5941

Rev. 120811

Copyright © 2017 Crydom Inc. Specifications subject to change without notice.

⚠ DANGER / PELIGRO / DANGER /GEFAHR / PERICOLO / 危险

HAZARD OF ELECTRIC SHOCK, EXPLOSION, OR ARC FLASH.

- Disconnect all power before installing or working with this equipment.
- Verify all connections and replace all covers before turning on power.

Failure to follow these instructions will result in death or serious injury.

RIESGO DE DESCARGA ELECTRICA O EXPLOSION.

- Desconectar todos los suministros de energia a este equipo antes de trabajar con este equipo.
- Verificar todas las conexiones y colocar todas las tapas antes de energizer el equipo.

El incumplimiento de estas instrucciones puede provocar la muerte o lesiones serias.

RISQUE DE DESCHARGE ELECTRIQUE OU EXPLOSION

- Eteindre toutes les sources d'énergie de cet appareil avant de travailler dessus de cet appareil
- Vérifier tous connections, et remettre tous couverts en olace avant de mettre sous

De non-suivi de ces instructions provoquera la mort ou des lésions sérieuses sérieuses.

GEFAHR EINES ELEKTRISCHE N SCHLAGES ODER EINER EXPLOSION.

- Stellen Sie jeglichen Strom ab, der dieses Gerät versorgt, bevor Sie an dem Gerät Arbeiten durchführen
- Vor dem Drehen auf Energie alle Anschlüsse überprüfen und alle Abdeckungen ersetzen.

Unterlassung dieser Anweisungen können zum Tode oder zu schweren Verletzungen führen.

RISCHIO DI SCOSSA ELETTRICA O DELL'ESPLOSIONE.

- Spenga tutta l'alimentazione che fornisce questa apparecchiatura prima di lavorare a questa apparecchiatura
- Verificare tutti i collegamenti e sostituire tutte le coperture prima dell'accensione

L'omissione di queste istruzioni provocherà la morte o lesioni serie

存在电击、爆炸或电弧闪烁危险

- 在操作此设备之前请先关闭电源。

若不遵守这些说明，可能会导致严重的人身伤害甚至死亡。

⚠ WARNING / AVERTISSEMENT / WARNUNG /ADVERTENCIA / AVVERTENZA / 警告

RISK OF MATERIAL DAMAGE AND HOT ENCLOSURE

- The product's side panels may be hot, allow the product to cool before touching.
- Follow proper mounting instructions including torque values.
- Do not allow liquids or foreign objects to enter this product.

Failure to follow these instructions can result in serious injury, or equipment damage.

RISQUE DE DOMMAGE MATERIEL ET DE SURCHAUFFE DU BOITIER

- Les panneaux latéraux du produit peuvent être chauds. Laisser le produit refroidir avant de le toucher.
- Respecter les consignes de montage, et notamment les couples de serrage.
- Ne pas laisser pénétrer de liquide ni de corps étrangers à l'intérieur du produit.

Le non-respect de cette directive peut entraîner, des lésions corporelles graves ou des dommages matériels.

GEFAHR VON MATERIALSCHÄDEN UND GEHÄUSEERHITZUNG

- Die Seitenwände können heiß sein. Lassen Sie das Produkt abkühlen, bevor Sie es berühren.
- Beachten Sie die Montageanweisungen,
- Führen Sie keine Flüssigkeiten oder Fremdkörper in das Produkt ein.

Die Nichtbeachtung dieser Anweisung kann Körperverletzung oder Materialschäden zur Folge haben.

RIESGO DE DAÑOS MATERIALES Y DE SOBRECALENTAMIENTO DE LA UNIDAD

- Los paneles laterales del producto pueden estar calientes. Esperar que el producto se enfríe antes de tocarlo.
- Respetar las instrucciones de montaje, y en particular los pares de apretado.
- No dejar que penetren líquidos o cuerpos extraños en el producto.

Si no se respetan estas precauciones pueden producirse graves lesiones, daños materiales.

RISCHIO DI DANNI MATERIALI E D'INVOLUCRO CALDO

- I pannelli laterali dell'apparecchio possono scottare; lasciar quindi raffreddare il prodotto prima di toccarlo.
- Seguire le istruzioni di montaggio corrette.
- Non far entrare liquidi o oggetti estranei in questo apparecchio.

La mancata osservanza di questa precauzione può causare gravi rischi per l'incolumità personale o danni alle apparecchiature.

材料损坏和高温外壳的危险性

- 产品的一侧面板可能很热，在其冷却前请不要触碰。
- 遵照正确的安装说明，包括扭矩值。
- 请勿让液体及其他异物进入本产品。

如不能正确执行这些操作说明，极有可能造成严重人体伤害或者设备的损坏。

Copyright © 2017 Crydom Inc. Specifications subject to change without notice.

ANNEX - ENVIROMENTAL INFORMATION

The environmental information disclosed in this annex including the EIP Pollution logo are in compliance with People's Republic of China Electronic Industry Standard SJ/T11364 – 2006, Marking for Control of Pollution Caused by Electronic Information Products.

Part Name	Toxic or hazardous Substance and Elements					
	Lead (Pb)	Mercury (Hg)	Cadmium (Cd)	Hexavalent Chromium (Cr (VI))	Polybrominated biphenyls (PBB)	Polybrominated diphenyl ethers (PBDE)
Semiconductor die	X	O	O	O	O	O
Solder	X	O	O	O	O	O

附件 – 环保信息

此附件所标示的包括电子信息产品污染图标的环保信息符合中华人民共和国电子行业标准 SJ/T11364 - 2006, 电子信息产品污染控制标识要求。

部件名称	有毒有害物质或元素					
	铅 (Pb)	汞 (Hg)	镉 (Cd)	六价铬 (Cr (VI))	多溴联苯 (PBB)	多溴二苯醚 (PBDE)
半导体芯片	X	O	O	O	O	O
焊接点	X	O	O	O	O	O

Copyright © 2017 Crydom Inc. Specifications subject to change without notice.