74LV4066

Quad bilateral switches

Rev. 4 — 9 December 2015 Product data sheet

1. General description

The 74LV4066 is a low-voltage Si-gate CMOS device that is pin and function compatible with the 74HC4066 and 74HCT4066.

The 74LV4066 has four independent switches. Each switch has two input/output pins (nY, nZ) and an active HIGH enable input pin (nE). When nE is LOW the corresponding analog switch is turned off.

The 74LV4066 has a ON-resistance which is reduced in comparison with the 74HCT4066.

2. Features and benefits

- Optimized for low-voltage applications: 1.0 V to 3.6 V
- Typical V_{OLP} (output ground bounce): < 0.8 V at V_{CC} = 3.3 V and T_{amb} = 25 °C
- Accepts TTL input levels between V_{CC} = 2.7 V and V_{CC} = 3.6 V
- Very low ON-resistance:
  - 60 Ω (typical) at V_{CC} = 2.0 V
  - 35 Ω (typical) at V_{CC} = 3.0 V
  - 25 Ω (typical) at V_{CC} = 4.5 V
- ESD protection:
  - HBM JESD22-A114F exceeds 2000 V
  - MM JESD22-A115-A exceeds 200 V
- Specified from –40 °C to +80 °C and from –40 °C to +125 °C

3. Ordering information

Table 1. Ordering information

Type number	Package			
	Temperature range	Name	Description	Version
74LV4066D	–40 °C to +125 °C	SO14	plastic small outline package; 14 leads; body width 3.9 mm	SOT108-1
74LV4066DB	–40 °C to +125 °C	SSOP14	plastic shrink small outline package; 14 leads; body width 5.3 mm	SOT337-1
74LV4066PW	–40 °C to +125 °C	TSSOP14	plastic thin shrink small outline package; 14 leads; body width 4.4 mm	SOT402-1

nexperia

4. Functional diagram

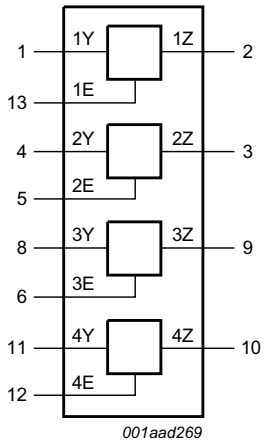

Fig 1. Logic symbol

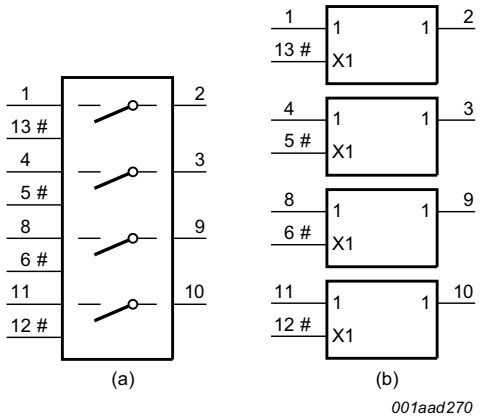

Fig 2. IEC logic diagram

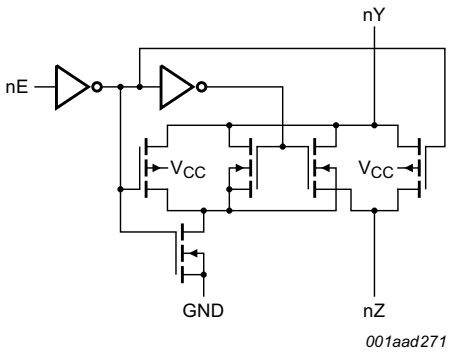

Fig 3. Logic diagram (one switch)

All information provided in this document is subject to legal disclaimers.

© Nexperia B.V. 2017. All rights reserved

5. Pinning information

5.1 Pinning

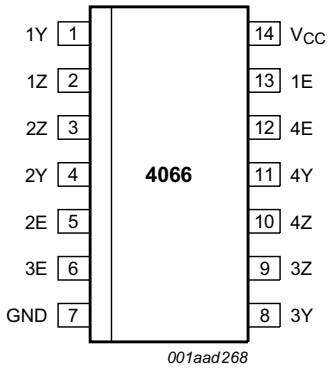

Fig 4. Pin configuration

5.2 Pin description

Table 2. Pin description

Symbol	Pin	Description
1Y, 2Y, 3Y, 4Y	1, 4, 8, 11	independent input or output
1Z, 2Z, 3Z, 4Z	2, 3, 9, 10	independent output or input
GND	7	ground (0 V)
1E, 2E, 3E, 4E	13, 5, 6, 12	enable input
V_{CC}	14	supply voltage

6. Functional description

6.1 Function table

Table 3. Function table

Input nE	Switch
LOW	off
HIGH	on

All information provided in this document is subject to legal disclaimers.

© Nexperia B.V. 2017. All rights reserved

7. Limiting values

Table 4. Limiting values

In accordance with the Absolute Maximum Rating System (IEC 60134). Voltages are referenced to GND (ground = 0 V).

Symbol	Parameter	Conditions		Min	Max	Unit
V_{CC}	supply voltage			–0.5	+7.0	V
I_{IK}	input clamping current	V_I < –0.5 V or V_I > V_{CC} + 0.5 V		-	±20	mA
I_{OK}	output clamping current	V_O < –0.5 V or V_O > V_{CC} + 0.5 V		-	±50	mA
I_{SW}	switch current	V_O = –0.5 V to (V_{CC} + 0.5 V)	[1]	-	±25	mA
T_{stg}	storage temperature			–65	+150	°C
P_{tot}	total power dissipation	T_{amb} = –40 °C to +125 °C				
		SO14 package	[2]	-	500	mW
		(T)SSOP14 package	[3]		400	mW

[1] The input and output voltage ratings may be exceeded if the input and output current ratings are observed.

[2] SO14 package: P_{tot} derates linearly with 8 mW/K above 70 °C.

[3] (T)SSOP14 package: P_{tot} derates linearly with 5.5 mW/K above 60 °C.

8. Recommended operating conditions

Table 5. Recommended operating conditions

Symbol	Parameter	Conditions		Min	Typ	Max	Unit
V_{CC}	supply voltage		[1]	1.0	3.3	6	V
V_I	input voltage			0	-	V_{CC}	V
V_O	output voltage			0	-	V_{CC}	V
T_{amb}	ambient temperature	in free air		–40	-	+125	°C
$\Delta t/\Delta V$	input transition rise and fall rate	V_{CC} = 1.0 V to 2.0 V		-	-	500	ns/V
		V_{CC} = 2.0 V to 2.7 V		-	-	200	ns/V
		V_{CC} = 2.7 V to 3.6 V		-	-	100	ns/V
		V_{CC} = 3.6 V to 5.5 V		-	-	50	ns/V

[1] The static characteristics are guaranteed from V_{CC} = 1.2 V to V_{CC} = 5.5 V, but LV devices are guaranteed to function down to V_{CC} = 1.0 V (with input levels GND or V_{CC}).

All information provided in this document is subject to legal disclaimers.

© Nexperia B.V. 2017. All rights reserved

9. Static characteristics

Table 6. Static characteristics

At recommended operating conditions; voltages are referenced to GND (ground = 0 V).

Symbol	Parameter	Conditions	Min	Typ	Max	Unit
T_{amb} = –40 °C to +85 °C						
V_{IH}	HIGH-level input voltage	V_{CC} = 1.2 V	0.90	-	-	V
		V_{CC} = 2.0 V	1.40	-	-	V
		V_{CC} = 2.7 V to 3.6 V	2.00	-	-	V
		V_{CC} = 4.5 V	3.15	-	-	V
		V_{CC} = 6.0 V	4.20	-	-	V
V_{IL}	LOW-level input voltage	V_{CC} = 1.2 V	-	-	0.30	V
		V_{CC} = 2.0 V	-	-	0.60	V
		V_{CC} = 2.7 V to 3.6 V	-	-	0.80	V
		V_{CC} = 4.5 V	-	-	1.35	V
		V_{CC} = 6.0 V	-	-	1.80	V
I_I	input leakage current	V_I = V_{CC} or GND				
		V_{CC} = 3.6 V	-	-	1.0	μA
		V_{CC} = 6.0 V	-	-	2.0	μA
$I_{S(OFF)}$	OFF-state leakage current	V_I = V_{IH} or V_{IL}; see Figure 5				
		V_{CC} = 3.6 V	-	-	1.0	μA
		V_{CC} = 6.0 V	-	-	2.0	μA
$I_{S(ON)}$	ON-state leakage current	V_I = V_{IH} or V_{IL}; see Figure 6				
		V_{CC} = 3.6 V	-	-	1.0	μA
		V_{CC} = 6.0 V	-	-	2.0	μA
I_{CC}	supply current	V_I = V_{CC} or GND; I_O = 0 A				
		V_{CC} = 3.6 V	-	-	20	μA
		V_{CC} = 6.0 V	-	-	40	μA
ΔI_{CC}	additional supply current	per input; V_I = V_{CC} – 0.6 V; V_{CC} = 2.7 V to 3.6 V	-	-	500	μA
C_I	input capacitance		-	3.5	-	pF
T_{amb} = –40 °C to +125 °C						
V_{IH}	HIGH-level input voltage	V_{CC} = 1.2 V	0.90	-	-	V
		V_{CC} = 2.0 V	1.40	-	-	V
		V_{CC} = 2.7 V to 3.6 V	2.00	-	-	V
		V_{CC} = 4.5 V	3.15	-	-	V
		V_{CC} = 6.0 V	4.20			V
V_{IL}	LOW-level input voltage	V_{CC} = 1.2 V	-	-	0.30	V
		V_{CC} = 2.0 V	-	-	0.60	V
		V_{CC} = 2.7 V to 3.6 V	-	-	0.80	V
		V_{CC} = 4.5 V	-	-	1.35	V
		V_{CC} = 6.0 V	-	-	1.80	V

All information provided in this document is subject to legal disclaimers.

© Nexperia B.V. 2017. All rights reserved

Table 6. Static characteristics *...continued*

At recommended operating conditions; voltages are referenced to GND (ground = 0 V).

Symbol	Parameter	Conditions	Min	Typ	Max	Unit
I_I	input leakage current	$V_I = V_{CC}$ or GND				
		V_{CC} = 3.6 V	-	-	1.0	μA
		V_{CC} = 6.0 V	-	-	2.0	μA
$I_{S(OFF)}$	OFF-state leakage current	$V_I = V_{IH}$ or V_{IL}; see Figure 5				
		V_{CC} = 3.6 V	-	-	1.0	μA
		V_{CC} = 6.0 V	-	-	2.0	μA
$I_{S(ON)}$	ON-state leakage current	$V_I = V_{IH}$ or V_{IL}; see Figure 6				
		V_{CC} = 3.6 V	-	-	1.0	μA
		V_{CC} = 6.0 V	-	-	2.0	μA
I_{CC}	supply current	$V_I = V_{CC}$ or GND; I_O = 0 A				
		V_{CC} = 3.6 V	-	-	40	μA
		V_{CC} = 6.0 V	-	-	80	μA
ΔI_{CC}	additional supply current	per input; $V_I = V_{CC} - 0.6$ V; V_{CC} = 2.7 V to 3.6 V	-	-	850	μA

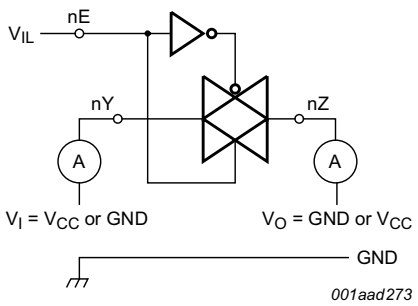

Fig 5. Test circuit for measuring OFF-state leakage current

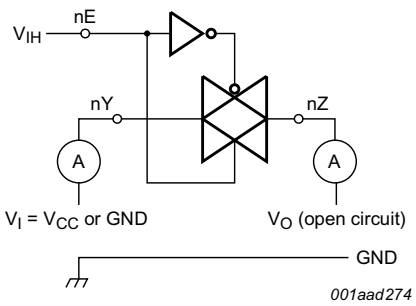

Fig 6. Test circuit for measuring ON-state leakage current

All information provided in this document is subject to legal disclaimers.

© Nexperia B.V. 2017. All rights reserved

Table 7. ON-resistance

At recommended operating conditions; voltages are referenced to GND (ground = 0 V); for test circuit see Figure 7.

Symbol	Parameter	Conditions	Min	Typ[1]	Max	Unit
T_{amb} = –40 °C to +85 °C; see Figure 8						
$R_{ON(peak)}$	ON resistance (peak)	$V_I = V_{IH}$ or V_{IL}				
		V_{CC} = 1.2 V [2]	-	300	-	Ω
		V_{CC} = 2.0 V	-	60	130	Ω
		V_{CC} = 2.7 V	-	41	60	Ω
		V_{CC} = 3.0 V to 3.6 V	-	37	72	Ω
		V_{CC} = 4.5 V	-	25	52	Ω
		V_{CC} = 6.0 V	-	23	47	Ω
$R_{ON(rail)}$	ON resistance (rail)	$V_I = V_{IH}$ or V_{IL}; V_{is} = GND				
		V_{CC} = 1.2 V [2]	-	75	-	Ω
		V_{CC} = 2.0 V	-	35	98	Ω
		V_{CC} = 2.7 V	-	26	60	Ω
		V_{CC} = 3.0 V to 3.6 V	-	24	52	Ω
		V_{CC} = 4.5 V	-	15	40	Ω
		V_{CC} = 6.0 V	-	13	35	Ω
		$V_I = V_{IH}$ or V_{IL}; $V_{is} = V_{CC}$				
		V_{CC} = 1.2 V [2]	-	75	-	Ω
		V_{CC} = 2.0 V	-	40	110	Ω
		V_{CC} = 2.7 V	-	35	72	Ω
		V_{CC} = 3.0 V to 3.6 V	-	30	65	Ω
		V_{CC} = 4.5 V	-	22	47	Ω
		V_{CC} = 6.0 V	-	20	40	Ω
$R_{ON(flat)}$	ON resistance (flatness)	$V_I = V_{IH}$ or V_{IL}; $V_{is} = V_{CC}$				
		V_{CC} = 2.0 V	-	5	-	Ω
		V_{CC} = 2.7 V	-	4	-	Ω
		V_{CC} = 3.0 V to 3.6 V	-	4	-	Ω
		V_{CC} = 4.5 V	-	3	-	Ω
		V_{CC} = 6.0 V	-	2	-	Ω
T_{amb} = –40 °C to +125 °C						
$R_{ON(peak)}$	ON resistance (peak)	$V_I = V_{IH}$ or V_{IL}				
		V_{CC} = 2.0 V	-	-	150	Ω
		V_{CC} = 2.7 V	-	-	90	Ω
		V_{CC} = 3.0 V to 3.6 V	-	-	83	Ω
		V_{CC} = 4.5 V	-	-	60	Ω
		V_{CC} = 6.0 V	-	-	54	Ω

All information provided in this document is subject to legal disclaimers.

© Nexperia B.V. 2017. All rights reserved

Table 7. ON-resistance *...continued*

At recommended operating conditions; voltages are referenced to GND (ground = 0 V); for test circuit see Figure 7.

Symbol	Parameter	Conditions	Min	Typ[1]	Max	Unit
$R_{ON(rail)}$	ON resistance (rail)	$V_I = V_{IH}$ or V_{IL}; V_{is} = GND				
		V_{CC} = 2.0 V	-	-	115	Ω
		V_{CC} = 2.7 V	-	-	68	Ω
		V_{CC} = 3.0 V to 3.6 V	-	-	60	Ω
		V_{CC} = 4.5 V	-	-	45	Ω
		V_{CC} = 6.0 V	-	-	40	Ω
		$V_I = V_{IH}$ or V_{IL}; $V_{is} = V_{CC}$				
		V_{CC} = 2.0 V	-	-	130	Ω
		V_{CC} = 2.7 V	-	-	85	Ω
		V_{CC} = 3.0 V to 3.6 V	-	-	75	Ω
		V_{CC} = 4.5 V	-	-	55	Ω
		V_{CC} = 6.0 V	-	-	47	Ω

[1] All typical values are measured at T_{amb} = 25 °C.

[2] At supply voltage approaching 1.2 V, the analog switch ON-resistance becomes extremely non-linear. Therefore it is recommended that these devices be used to transmit digital signals only, when using these supply voltages.

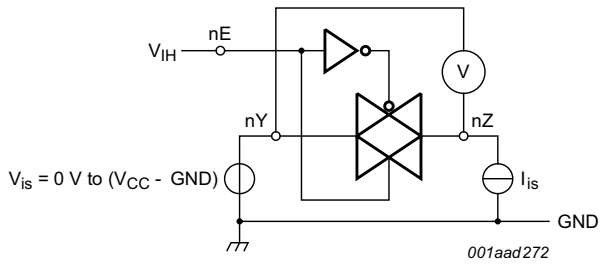

Fig 7. Test circuit for measuring ON resistance

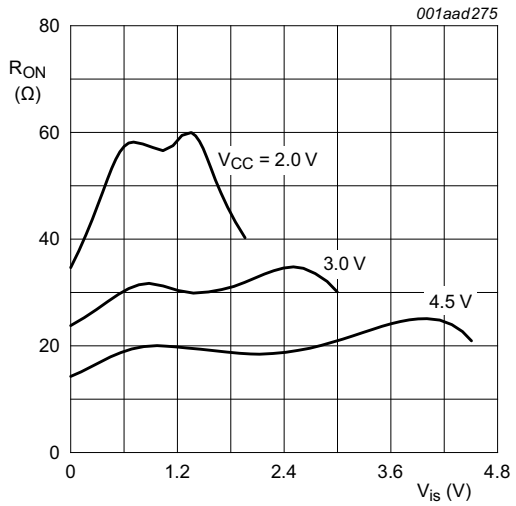

Fig 8. ON resistance as a function of input voltage

All information provided in this document is subject to legal disclaimers.

© Nexperia B.V. 2017. All rights reserved

10. Dynamic characteristics

Table 8. Dynamic characteristics

Voltages are referenced to GND (ground = 0 V); for test circuit see Figure 11.

Symbol	Parameter	Conditions		Min	Typ[1]	Max	Unit
T_{amb} = –40 °C to +85 °C							
t_{pd}	propagation delay	V_{is} to V_{os}; see Figure 9	[2]				
		V_{CC} = 1.2 V		-	8	-	ns
		V_{CC} = 2.0 V		-	5	26	ns
		V_{CC} = 2.7 V to 3.6 V		-	3	15	ns
		V_{CC} = 4.5 V		-	2	13	ns
		V_{CC} = 6.0 V		-	2	10	ns
t_{on}	turn-on time	nE to V_{os}; see Figure 9	[3]				
		V_{CC} = 1.2 V		-	40	-	ns
		V_{CC} = 2.0 V		-	22	43	ns
		V_{CC} = 2.7 V to 3.6 V		-	12	25	ns
		V_{CC} = 3.3 V; C_L = 15 pF		-	10	-	ns
		V_{CC} = 4.5 V		-	10	21	ns
		V_{CC} = 6.0 V		-	8	16	ns
t_{off}	turn-off time	nE to V_{os}; see Figure 9	[4]				
		V_{CC} = 1.2 V		-	50	-	ns
		V_{CC} = 2.0 V		-	27	65	ns
		V_{CC} = 2.7 V to 3.6 V		-	15	38	ns
		V_{CC} = 3.3 V; C_L = 15 pF		-	13	-	ns
		V_{CC} = 4.5 V		-	13	32	ns
		V_{CC} = 6.0 V		-	12	28	ns
C_{PD}	power dissipation capacitance	per switch; V_{CC} = 3.3 V; V_I = GND to V_{CC}; C_L = 15 pF	[5]	-	11	-	pF
T_{amb} = –40 °C to +125 °C							
t_{pd}	propagation delay	V_{is} to V_{os}; see Figure 9	[2]				
		V_{CC} = 2.0 V		-	-	31	ns
		V_{CC} = 2.7 V to 3.6 V		-	-	18	ns
		V_{CC} = 4.5 V		-	-	15	ns
		V_{CC} = 6.0 V		-	-	12	ns
t_{on}	turn-on time	nE to V_{os}; see Figure 9	[3]				
		V_{CC} = 2.0 V		-	-	51	ns
		V_{CC} = 2.7 V to 3.6 V		-	-	30	ns
		V_{CC} = 4.5 V		-	-	26	ns
		V_{CC} = 6.0 V		-	-	20	ns

All information provided in this document is subject to legal disclaimers.

© Nexperia B.V. 2017. All rights reserved

Table 8. Dynamic characteristics *...continued*

Voltages are referenced to GND (ground = 0 V); for test circuit see Figure 11.

Symbol	Parameter	Conditions	Min	Typ[1]	Max	Unit
t_{off}	turn-off time	nE to V_{os}; see Figure 9 [4]				
		V_{CC} = 2.0 V	-	-	81	ns
		V_{CC} = 2.7 V to 3.6 V	-	-	47	ns
		V_{CC} = 4.5 V	-	-	40	ns
		V_{CC} = 6.0 V	-	-	34	ns

[1] Typical values are measured at nominal V_{CC} and T_{amb} = 25 °C.

[2] t_{pd} is the same as t_{PLH} and t_{PHL}.

[3] t_{on} is the same as t_{PZH} and t_{PZL}.

[4] t_{off} is the same as t_{PHZ} and t_{PLZ}.

[5] C_{PD} is used to determine the dynamic power dissipation (P_D in μW).
$P_D = C_{PD} \times V_{CC}^2 \times f_i \times N + \Sigma[(C_L + C_S) \times V_{CC}^2 \times f_o]$ where:
f_i = input frequency in MHz;
f_o = output frequency in MHz;
C_L = output load capacitance in pF;
C_S = maximum switch capacitance in pF;
V_{CC} = supply voltage in V;
N = number of inputs switching;
$\Sigma[(C_L + C_S) \times V_{CC}^2 \times f_o]$ = sum of the outputs.

All information provided in this document is subject to legal disclaimers.

© Nexperia B.V. 2017. All rights reserved

11. Waveforms

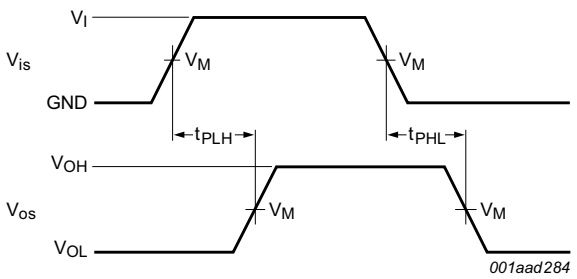

Measurement points are given in Table 9.

V_{OL} and V_{OH} are typical voltage output levels that occur with the output load.

Fig 9. Input to output propagation delays

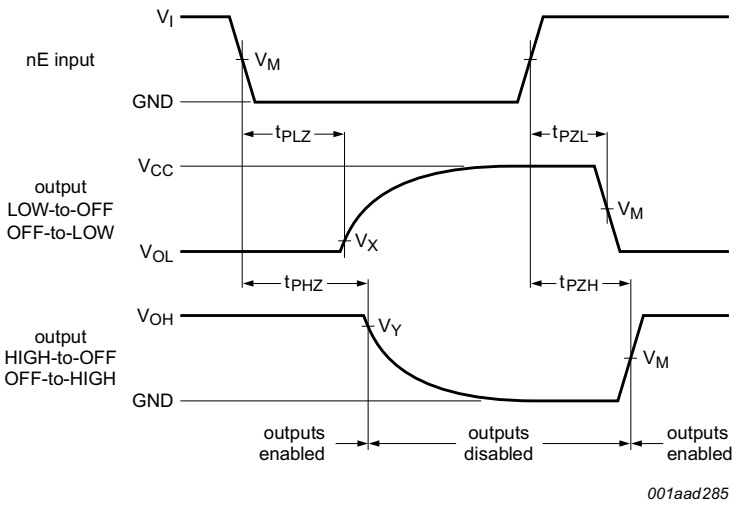

Measurement points are given in Table 9.

V_{OL} and V_{OH} are typical voltage output levels that occur with the output load.

Fig 10. Turn-on and turn-off times for the inputs to the output

Table 9. Measurement points

Supply voltage	Input	Output		
V_{CC}	V_M	V_M	V_X	V_Y
≥ 2.7 V	1.5 V	1.5 V	V_{OL} + 0.3	V_{OH} − 0.3 V
< 2.7 V	0.5 × V_{CC}	0.5 × V_{CC}	V_{OL} + 0.15	V_{OH} − 0.15 V

All information provided in this document is subject to legal disclaimers.

© Nexperia B.V. 2017. All rights reserved

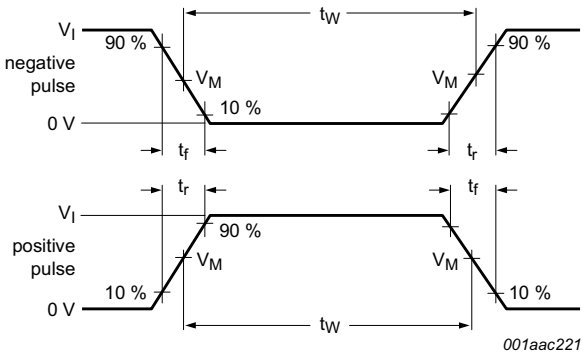

a. Input pulse definition

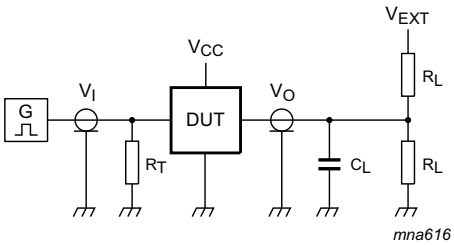

Test data is given in Table 10.

Definitions test circuit:

R_L = Load resistance.

C_L = Load capacitance includes jig and probe capacitance.

R_T = Termination resistance should be equal to Z_o of the pulse generator.

V_{EXT} = Test voltage for switching times.

b. Test circuit

Fig 11. Test circuit for measuring switching times

Table 10. Test data

Supply voltage	Input		Load		V_{EXT}		
V_{CC}	V_I	t_r, t_f	C_L	R_L[1]	t_{PHZ}, t_{PZH}	t_{PLZ}, t_{PZL}	t_{PLH}, t_{PHL}
< 2.7 V	V_{CC}	≤ 2.5 ns	50 pF	1 kΩ	GND	2 × V_{CC}	open
2.7 V to 3.6 V	2.7 V	≤ 2.5 ns	50 pF	1 kΩ	GND	2 × V_{CC}	open
≥ 4.5 V	V_{CC}	≤ 2.5 ns	50 pF	1 kΩ	GND	2 × V_{CC}	open

[1] $R_L = \infty\ \Omega$ for measuring the propagation delays t_{PLH} and t_{PHL}.

All information provided in this document is subject to legal disclaimers.

© Nexperia B.V. 2017. All rights reserved

12. Additional dynamic characteristics

Table 11. Additional dynamic characteristics

Voltages are referenced to GND (ground = 0 V); V_{is} is the input voltage at pin nY or nZ, whichever is assigned as an input; V_{os} is the output voltage at pin nY or nZ, whichever is assigned as an output.

Symbol	Parameter	Conditions	Min	Typ	Max	Unit
d_{sin}	sine-wave distortion	R_L = 10 kΩ; f = 1 kHz; C_L = 50 pF; see Figure 12				
		V_{CC} = 3.0 V; V_{is} = 2.75 V (p-p)	-	0.04	-	%
		V_{CC} = 6.0 V; V_{is} = 5.50 V (p-p)	-	0.02	-	%
		R_L = 10 kΩ; f = 10 kHz; C_L = 50 pF; see Figure 12				
		V_{CC} = 3.0 V; V_{is} = 2.75 V (p-p)	-	0.12	-	%
		V_{CC} = 6.0 V; V_{is} = 5.50 V (p-p)	-	0.06	-	%
$\alpha_{OFF(feedthru)}$	switch OFF-state signal feed-through attenuation	R_L = 600 kΩ; f = 1 MHz; C_L = 50 pF; see Figure 13 and Figure 14 [1]				
		V_{CC} = 3.0 V	-	–50	-	dB
		V_{CC} = 6.0 V	-	–50	-	dB
$\alpha_{ct(S)}$	crosstalk between switches	R_L = 600 kΩ; f = 1 MHz; C_L = 50 pF; see Figure 15 [1]				
		V_{CC} = 3.0 V	-	–60	-	dB
		V_{CC} = 6.0 V	-	–60	-	dB
$V_{ct(pp)}$	crosstalk voltage between enable input to any switch (peak-to-peak value)	R_L = 600 kΩ; f = 1 MHz; C_L = 50 pF; see Figure 16 and Figure 17 [2]				
		V_{CC} = 3.0 V	-	110	-	mV
		V_{CC} = 6.0 V	-	220	-	mV
f_{max}	minimum frequency response (–3 dB)	R_L = 50 kΩ; C_L = 50 pF; see Figure 18 and Figure 19 [3]				
		V_{CC} = 3.0 V	-	180	-	MHz
		V_{CC} = 6.0 V	-	200	-	MHz
C_S	maximum switch capacitance		-	8	-	pF

[1] Adjust input voltage V_{is} is 0 dBm level (0 dBm = 1 mW into 600 Ω).

[2] Pin nE: square wave between V_{CC} and GND, $t_r = t_f$ = 6 ns.

[3] Adjust input voltage V_{is} is 0 dBm level at V_{os} for 1 MHz (0 dBm = 1 mW into 50 Ω).

All information provided in this document is subject to legal disclaimers.

© Nexperia B.V. 2017. All rights reserved

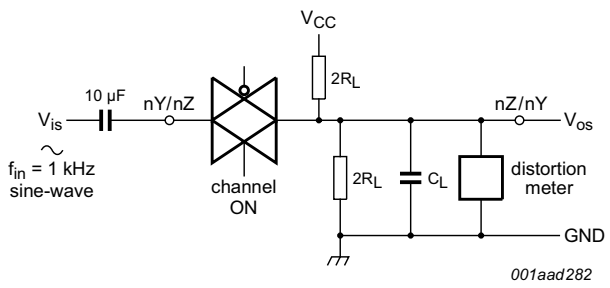

Fig 12. Test circuit for measuring sine-wave distortion

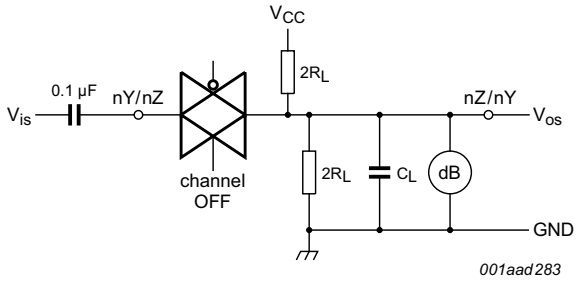

Fig 13. Test circuit for measuring switch OFF-state signal feed-through

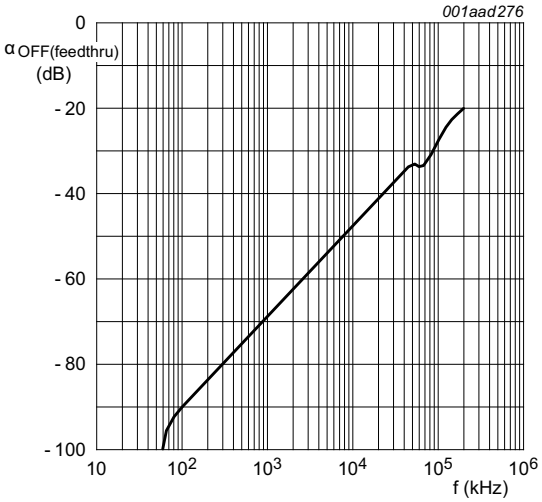

V_{CC} = 3.0 V; GND = 0 V; R_L = 50 Ω; R_{SOURCE} = 1 kΩ.

Fig 14. Switch OFF-state signal feed-through as a function of frequency

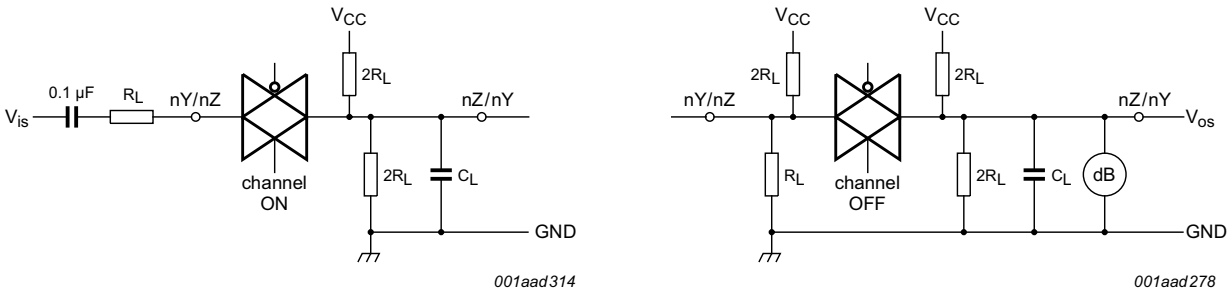

a. Channel on condition

b. Channel off condition

Fig 15. Test circuit for measuring crosstalk between switches

All information provided in this document is subject to legal disclaimers.

© Nexperia B.V. 2017. All rights reserved

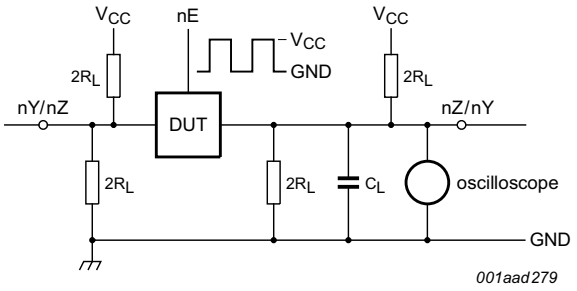

Fig 16. Test circuit for measuring crosstalk between enable and any switch

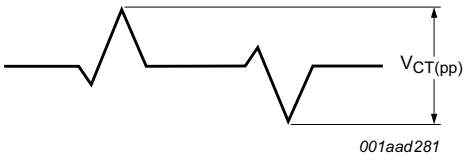

Fig 17. Crosstalk definition (oscilloscope output)

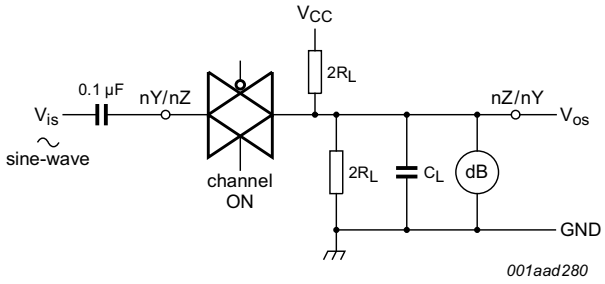

Fig 18. Test circuit for measuring minimum frequency response

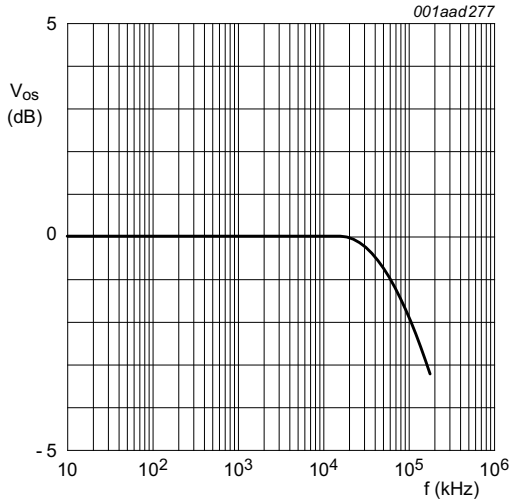

V_{CC} = 3.0 V; GND = 0 V; R_L = 50 Ω; R_{SOURCE} = 1 kΩ.

Fig 19. Frequency response

All information provided in this document is subject to legal disclaimers.

© Nexperia B.V. 2017. All rights reserved

13. Package outline

SO14: plastic small outline package; 14 leads; body width 3.9 mm **SOT108-1**

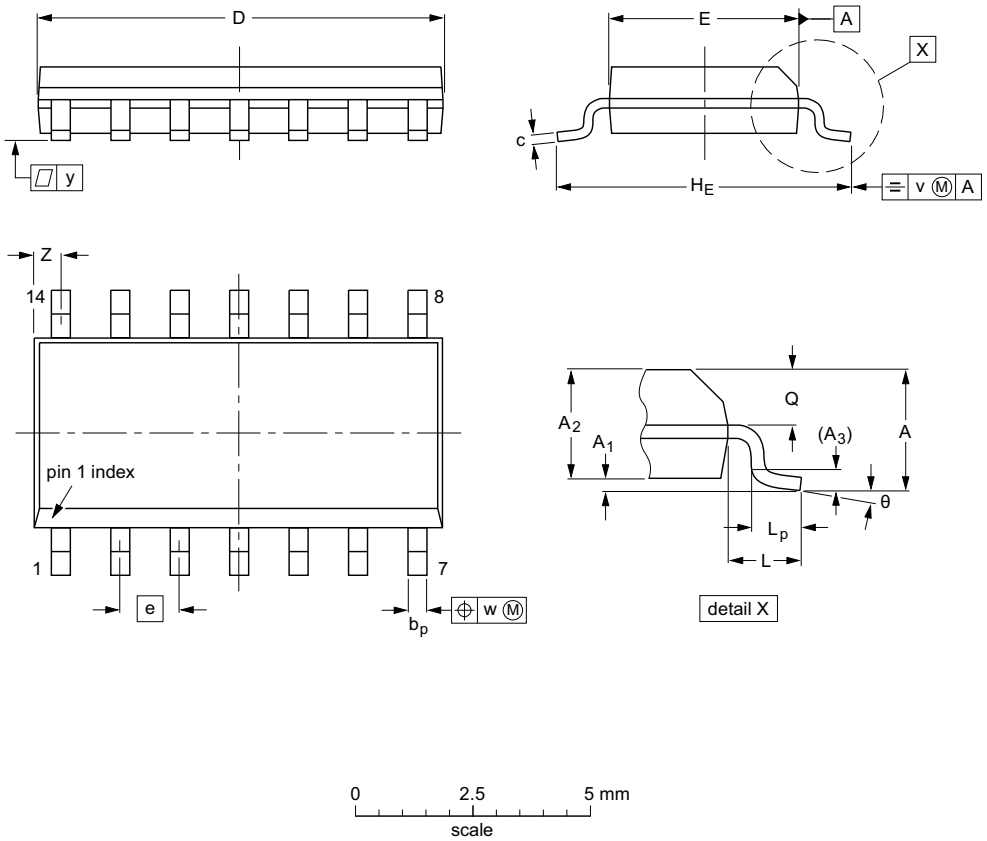

DIMENSIONS (inch dimensions are derived from the original mm dimensions)

UNIT	A max.	A_1	A_2	A_3	b_p	c	D(1)	E(1)	e	H_E	L	L_p	Q	v	w	y	Z(1)	θ
mm	1.75	0.25 0.10	1.45 1.25	0.25	0.49 0.36	0.25 0.19	8.75 8.55	4.0 3.8	1.27	6.2 5.8	1.05	1.0 0.4	0.7 0.6	0.25	0.25	0.1	0.7 0.3	8° 0°
inches	0.069	0.010 0.004	0.057 0.049	0.01	0.019 0.014	0.0100 0.0075	0.35 0.34	0.16 0.15	0.05	0.244 0.228	0.041	0.039 0.016	0.028 0.024	0.01	0.01	0.004	0.028 0.012	

Note

1. Plastic or metal protrusions of 0.15 mm (0.006 inch) maximum per side are not included.

OUTLINE VERSION	REFERENCES				EUROPEAN PROJECTION	ISSUE DATE
	IEC	JEDEC	JEITA			
SOT108-1	076E06	MS-012				~~99-12-27~~ 03-02-19

Fig 20. Package outline SOT108-1 (SO14)

All information provided in this document is subject to legal disclaimers.

© Nexperia B.V. 2017. All rights reserved

SSOP14: plastic shrink small outline package; 14 leads; body width 5.3 mm **SOT337-1**

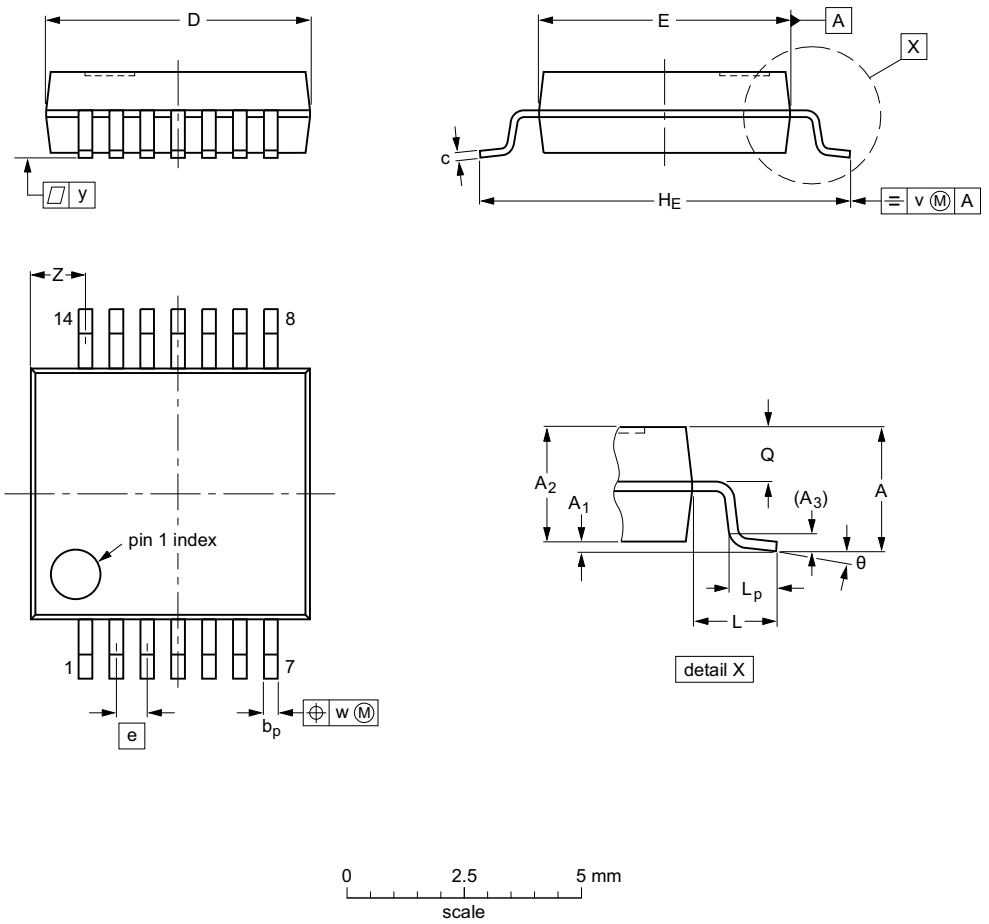

DIMENSIONS (mm are the original dimensions)

UNIT	A max.	A_1	A_2	A_3	b_p	c	D (1)	E (1)	e	H_E	L	L_p	Q	v	w	y	Z (1)	θ
mm	2	0.21 0.05	1.80 1.65	0.25	0.38 0.25	0.20 0.09	6.4 6.0	5.4 5.2	0.65	7.9 7.6	1.25	1.03 0.63	0.9 0.7	0.2	0.13	0.1	1.4 0.9	8° 0°

Note

1. Plastic or metal protrusions of 0.25 mm maximum per side are not included.

OUTLINE VERSION	REFERENCES				EUROPEAN PROJECTION	ISSUE DATE
	IEC	JEDEC	JEITA			
SOT337-1		MO-150				~~99-12-27~~ 03-02-19

Fig 21. Package outline SOT337-1 (SSOP14)

All information provided in this document is subject to legal disclaimers.

© Nexperia B.V. 2017. All rights reserved

TSSOP14: plastic thin shrink small outline package; 14 leads; body width 4.4 mm **SOT402-1**

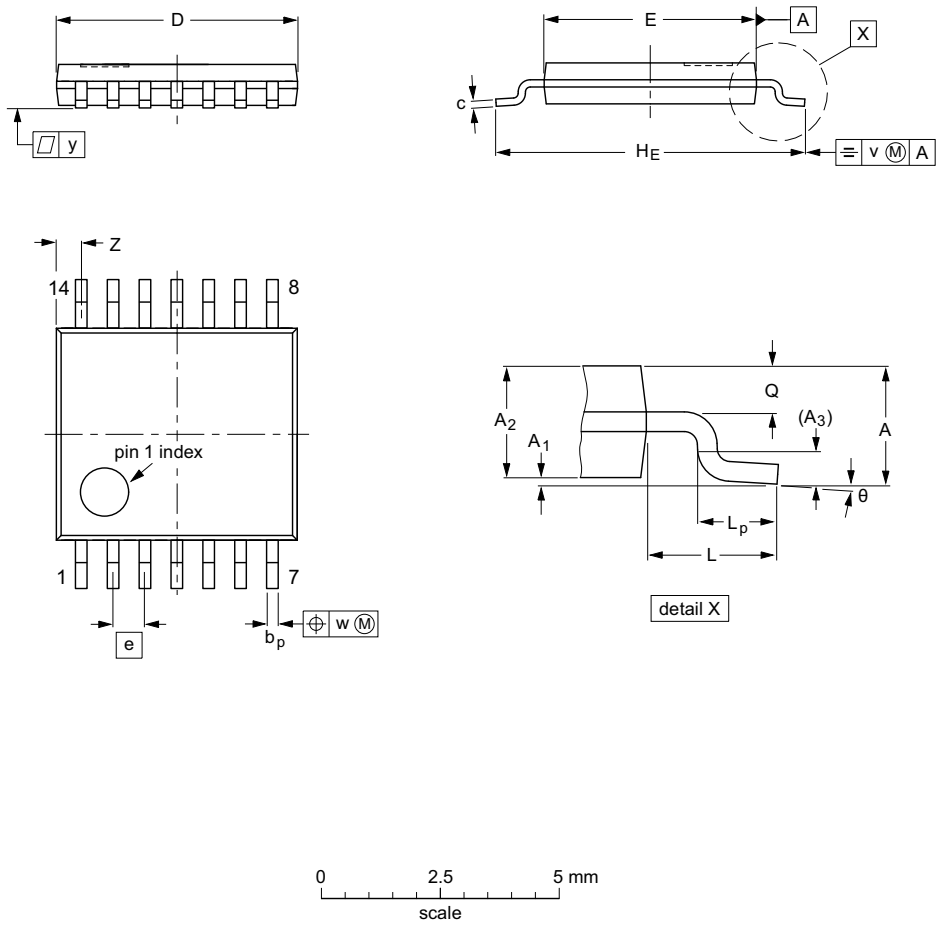

DIMENSIONS (mm are the original dimensions)

UNIT	A max.	A_1	A_2	A_3	b_p	c	D (1)	E (2)	e	H_E	L	L_p	Q	v	w	y	Z (1)	θ
mm	1.1	0.15 0.05	0.95 0.80	0.25	0.30 0.19	0.2 0.1	5.1 4.9	4.5 4.3	0.65	6.6 6.2	1	0.75 0.50	0.4 0.3	0.2	0.13	0.1	0.72 0.38	8° 0°

Notes

1. Plastic or metal protrusions of 0.15 mm maximum per side are not included.
2. Plastic interlead protrusions of 0.25 mm maximum per side are not included.

OUTLINE VERSION	REFERENCES				EUROPEAN PROJECTION	ISSUE DATE
	IEC	JEDEC	JEITA			
SOT402-1		MO-153				~~99-12-27~~ 03-02-18

Fig 22. Package outline SOT402-1 (TSSOP14)

All information provided in this document is subject to legal disclaimers.

© Nexperia B.V. 2017. All rights reserved

14. Abbreviations

Table 12. Abbreviations

Acronym	Description
CMOS	Complementary Metal Oxide Semiconductor
DUT	Device Under Test
ESD	ElectroStatic Discharge
HBM	Human Body Model
MM	Machine Model
TTL	Transistor-Transistor Logic

15. Revision history

Table 13. Revision history

Document ID	Release date	Data sheet status	Change notice	Supersedes
74LV4066 v.4	20151209	Product data sheet	-	74LV4066 v.3
Modifications:	• Type number 74LV4066N (SOT27-1) removed.			Modifications:
74LV4066 v.3	20050704	Product data sheet	-	74LV4066 v.2
Modifications:	• The format of this data sheet has been redesigned to comply with the new presentation and information standard of Philips Semiconductors. • Table 1: corrected package names.			
74LV4066 v.2	19980623	Product specification	-	-

All information provided in this document is subject to legal disclaimers.

© Nexperia B.V. 2017. All rights reserved

16. Legal information

16.1 Data sheet status

Document status[1][2]	Product status[3]	Definition
Objective [short] data sheet	Development	This document contains data from the objective specification for product development.
Preliminary [short] data sheet	Qualification	This document contains data from the preliminary specification.
Product [short] data sheet	Production	This document contains the product specification.

[1] Please consult the most recently issued document before initiating or completing a design.

[2] The term 'short data sheet' is explained in section "Definitions".

[3] The product status of device(s) described in this document may have changed since this document was published and may differ in case of multiple devices. The latest product status information is available on the Internet at URL http://www.nexperia.com.

16.2 Definitions

Draft — The document is a draft version only. The content is still under internal review and subject to formal approval, which may result in modifications or additions. Nexperia does not give any representations or warranties as to the accuracy or completeness of information included herein and shall have no liability for the consequences of use of such information.

Short data sheet — A short data sheet is an extract from a full data sheet with the same product type number(s) and title. A short data sheet is intended for quick reference only and should not be relied upon to contain detailed and full information. For detailed and full information see the relevant full data sheet, which is available on request via the local Nexperia sales office. In case of any inconsistency or conflict with the short data sheet, the full data sheet shall prevail.

Product specification — The information and data provided in a Product data sheet shall define the specification of the product as agreed between Nexperia and its customer, unless Nexperia and customer have explicitly agreed otherwise in writing. In no event however, shall an agreement be valid in which the Nexperia product is deemed to offer functions and qualities beyond those described in the Product data sheet.

16.3 Disclaimers

Limited warranty and liability — Information in this document is believed to be accurate and reliable. However, Nexperia does not give any representations or warranties, expressed or implied, as to the accuracy or completeness of such information and shall have no liability for the consequences of use of such information. Nexperia takes no responsibility for the content in this document if provided by an information source outside of Nexperia.

In no event shall Nexperia be liable for any indirect, incidental, punitive, special or consequential damages (including - without limitation - lost profits, lost savings, business interruption, costs related to the removal or replacement of any products or rework charges) whether or not such damages are based on tort (including negligence), warranty, breach of contract or any other legal theory.

Notwithstanding any damages that customer might incur for any reason whatsoever, Nexperia's aggregate and cumulative liability towards customer for the products described herein shall be limited in accordance with the *Terms and conditions of commercial sale* of Nexperia.

Right to make changes — Nexperia reserves the right to make changes to information published in this document, including without limitation specifications and product descriptions, at any time and without notice. This document supersedes and replaces all information supplied prior to the publication hereof.

Suitability for use — Nexperia products are not designed, authorized or warranted to be suitable for use in life support, life-critical or safety-critical systems or equipment, nor in applications where failure or malfunction of a Nexperia product can reasonably be expected to result in personal injury, death or severe property or environmental damage. Nexperia and its suppliers accept no liability for inclusion and/or use of Nexperia products in such equipment or applications and therefore such inclusion and/or use is at the customer's own risk.

Applications — Applications that are described herein for any of these products are for illustrative purposes only. Nexperia makes no representation or warranty that such applications will be suitable for the specified use without further testing or modification.

Customers are responsible for the design and operation of their applications and products using Nexperia products, and Nexperia accepts no liability for any assistance with applications or customer product design. It is customer's sole responsibility to determine whether the Nexperia product is suitable and fit for the customer's applications and products planned, as well as for the planned application and use of customer's third party customer(s). Customers should provide appropriate design and operating safeguards to minimize the risks associated with their applications and products.

Nexperia does not accept any liability related to any default, damage, costs or problem which is based on any weakness or default in the customer's applications or products, or the application or use by customer's third party customer(s). Customer is responsible for doing all necessary testing for the customer's applications and products using Nexperia products in order to avoid a default of the applications and the products or of the application or use by customer's third party customer(s). Nexperia does not accept any liability in this respect.

Limiting values — Stress above one or more limiting values (as defined in the Absolute Maximum Ratings System of IEC 60134) will cause permanent damage to the device. Limiting values are stress ratings only and (proper) operation of the device at these or any other conditions above those given in the Recommended operating conditions section (if present) or the Characteristics sections of this document is not warranted. Constant or repeated exposure to limiting values will permanently and irreversibly affect the quality and reliability of the device.

Terms and conditions of commercial sale — Nexperia products are sold subject to the general terms and conditions of commercial sale, as published at http://www.nexperia.com/profile/terms, unless otherwise agreed in a valid written individual agreement. In case an individual agreement is concluded only the terms and conditions of the respective agreement shall apply. Nexperia hereby expressly objects to applying the customer's general terms and conditions with regard to the purchase of Nexperia products by customer.

No offer to sell or license — Nothing in this document may be interpreted or construed as an offer to sell products that is open for acceptance or the grant, conveyance or implication of any license under any copyrights, patents or other industrial or intellectual property rights.

All information provided in this document is subject to legal disclaimers.

© Nexperia B.V. 2017. All rights reserved

Export control — This document as well as the item(s) described herein may be subject to export control regulations. Export might require a prior authorization from competent authorities.

Non-automotive qualified products — Unless this data sheet expressly states that this specific Nexperia product is automotive qualified, the product is not suitable for automotive use. It is neither qualified nor tested in accordance with automotive testing or application requirements. Nexperia accepts no liability for inclusion and/or use of non-automotive qualified products in automotive equipment or applications.

In the event that customer uses the product for design-in and use in automotive applications to automotive specifications and standards, customer (a) shall use the product without Nexperia's warranty of the product for such automotive applications, use and specifications, and (b) whenever customer uses the product for automotive applications beyond Nexperia's specifications such use shall be solely at customer's own risk, and (c) customer fully indemnifies Nexperia for any liability, damages or failed product claims resulting from customer design and use of the product for automotive applications beyond Nexperia's standard warranty and Nexperia's product specifications.

Translations — A non-English (translated) version of a document is for reference only. The English version shall prevail in case of any discrepancy between the translated and English versions.

16.4 Trademarks

Notice: All referenced brands, product names, service names and trademarks are the property of their respective owners.

17. Contact information

For more information, please visit: **http://www.nexperia.com**

For sales office addresses, please send an email to: **salesaddresses@nexperia.com**

All information provided in this document is subject to legal disclaimers.

© Nexperia B.V. 2017. All rights reserved

18. Contents

1 General description 1
2 Features and benefits 1
3 Ordering information 1
4 Functional diagram 2
5 Pinning information 3
5.1 Pinning 3
5.2 Pin description 3
6 Functional description 3
6.1 Function table 3
7 Limiting values 4
8 Recommended operating conditions 4
9 Static characteristics 5
10 Dynamic characteristics 9
11 Waveforms 11
12 Additional dynamic characteristics 13
13 Package outline 16
14 Abbreviations 19
15 Revision history 19
16 Legal information 20
16.1 Data sheet status 20
16.2 Definitions 20
16.3 Disclaimers 20
16.4 Trademarks 21
17 Contact information 21
18 Contents 22

© Nexperia B.V. 2017. All rights reserved

For more information, please visit: http://www.nexperia.com
For sales office addresses, please send an email to: salesaddresses@nexperia.com
Date of release: 09 December 2015