TAH Series

20 Watt TO220 Package
Thick Film Power

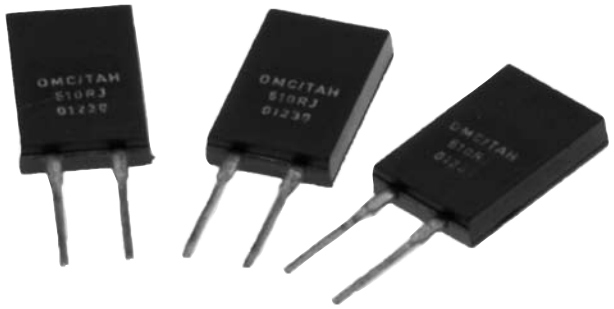

The TAH20 is a completely encapsulated thick film resistor in the TO220 package outline. Rated for 20 watts @ 25°C case temperature, these resistors are electrically isolated, and molded in a high temperature case.

Designed for heat sink mounting, the symmetrical package is ready for use with snap-on style heat sinks (we recommend use of thermal grease). The TAH20 Series has very low inductance, and available in a wide range of resistance values in standard 5% tolerance. 1% tolerance available by special order.

FEATURES

- 20 Watt Power Rating at 25°C Case Temperature
- High Pulse Tolerant Design
- Quick-snap Molded Package
- Very Low Inductance Design
- Resistor Package Electrically Isolated from Heat Sink
- Low Thermal Resistance to Heat Sink @ RTH<6.25°C/W
- Tube Packaging Available

APPLICATIONS

- Frequency Conversion
- High Frequency Balancing
- Snubbers

CHARACTERISTICS

Resistance Range	0.05Ω to 10KΩ, other values available upon request
Tolerance	<0.1Ω: 5% only 0.1Ω-1MΩ: 5% std.; 1% available
Temperature Coefficient	Referenced to 25°C, ΔR taken at +105°C; 1 to 10Ω: ±(100ppm+0.002Ω)/°C 10Ω & up: ±50ppm/°C
Max Operating Voltage	350V
Dielectric Strength	1,800 VAC
Power Rating	20W @ 25°C case temperature; see derating curve, below
Insulation Resistance	10GΩ min.
Momentary Overload	2x rated power for 5 seconds where applied voltage ≤1.5 times max. operating voltage. ΔR ±(0.3% + 0.001Ω) max.
Case Material	KMC-125 epoxy
Terminal Material	Copper
Terminal Plating	Lead Free Solder (97% Tin, 3% Silver)
Mounting	Requires the use of a snap-on style heat sink. A thermal compound should be properly applied.
Solder Process	The TAH20 cannot exceed 260°C for more than 10 seconds during soldering process.

Load Life	MIL-R-39009, 2000 Hours @ Rated Pwr	ΔR = ±(1.0% + 0.001) Ω
Thermal Shock	MIL-R-STD-202, Method 107, Cond. F	ΔR = ±(0.3% + 0.001) Ω max
High Freq Vibration	MIL-R-STD-202, Method 204, Cond. D	ΔR = ±(0.2% + 0.001) Ω max
Terminal Strength	MIL-R-STD-202, Method 211, Cond. A (Pull Test) 2.4N	ΔR = ±(0.2% + 0.001) Ω max
Moisture Resistance	MIL-R-STD-202, Method 106	ΔR = ±(0.5% + 0.01) Ω max

Derating

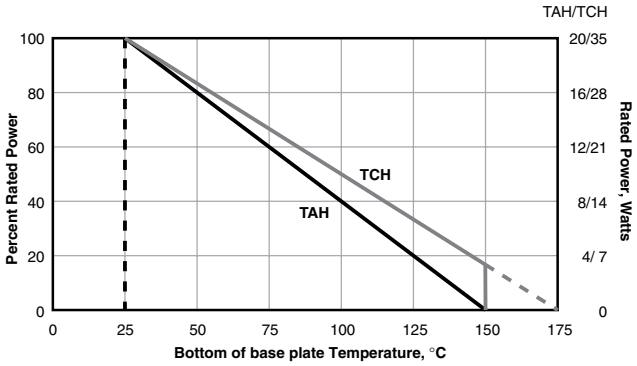

(continued)

TAH Series

20 Watt TO220 Package
Thick Film Power

DIMENSIONS

(iin./mm)

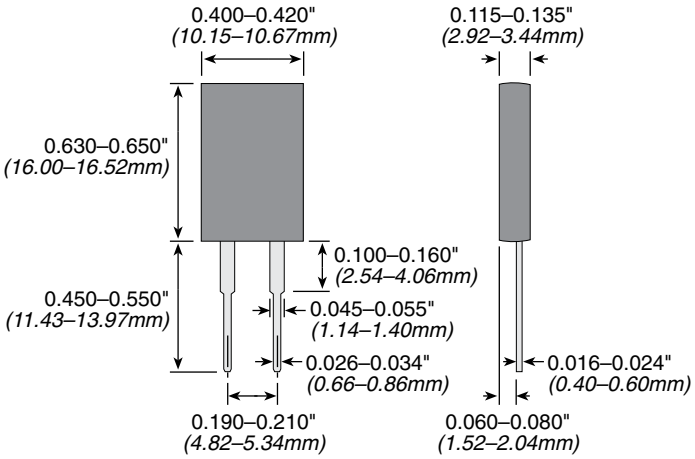

ORDERING INFORMATION

Tolerance
F = 1%
J = 5% Standard

Package Code

T A H 2 0 P 1 0 R 0 J E

Series

Ohm Value
Example:
2R40 = 2.4 Ohms
2K40 = 2400 Ohms

RoHS Compliant
Non-compliant
version unavailable

Standard Part Numbers

TAH20P100RJE	TAH20P220RJE	TAH20P33R0JE	TAH20P4R70JE	TAH20PR100JE
TAH20P10K0JE	TAH20P22R0JE	TAH20P390RJE	TAH20P510RJE	TAH20PR150JE
TAH20P10R0JE	TAH20P240RJE	TAH20P39R0JE	TAH20P51R0JE	TAH20PR200JE
TAH20P150RJE	TAH20P24R0JE	TAH20P3K30JE	TAH20P5K10JE	TAH20PR220JE
TAH20P15R0JE	TAH20P2K00JE	TAH20P3K90JE	TAH20P5R10JE	TAH20PR240JE
TAH20P1K00JE	TAH20P2K20JE	TAH20P3R30JE	TAH20P750RJE	TAH20PR330JE
TAH20P1K50JE	TAH20P2K40JE	TAH20P3R90JE	TAH20P75R0JE	TAH20PR390JE
TAH20P1R00JE	TAH20P2R00JE	TAH20P470RJE	TAH20P7K50JE	TAH20PR470JE
TAH20P1R50JE	TAH20P2R20JE	TAH20P47R0JE	TAH20P7R50JE	TAH20PR510JE
TAH20P200RJE	TAH20P2R40JE	TAH20P4K70JE	TAH20PR050JE	TAH20PR750JE
TAH20P20R0JE	TAH20P330RJE			

THIS PRODUCT IS DESIGNED FOR USE WITH PROPER HEATSINKING.
Maximum base plate temperature of the resistor must be monitored and kept within specified limits to establish the power rating. Best technique is to attach a thermocouple to the side of the base plate of the resistor. Temperature of plastic housing or heat sink cannot be used to establish rating of the resistor.