# TAH Series

## 20 Watt TO220 Package
## Thick Film Power

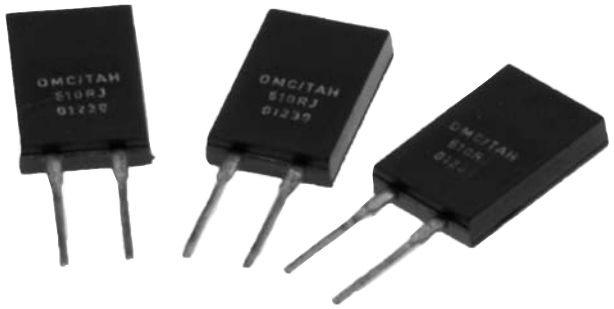

The TAH20 is a completely encapsulated thick film resistor in the TO220 package outline. Rated for 20 watts @ 25°C case temperature, these resistors are electrically isolated, and molded in a high temperature case.

Designed for heat sink mounting, the symmetrical package is ready for use with snap-on style heat sinks (we recommend use of thermal grease). The TAH20 Series has very low inductance, and available in a wide range of resistance values in standard 5% tolerance. 1% tolerance available by special order.

### FEATURES

- 20 Watt Power Rating at 25°C Case Temperature
- High Pulse Tolerant Design
- Quick-snap Molded Package
- Very Low Inductance Design
- Resistor Package Electrically Isolated from Heat Sink
- Low Thermal Resistance to Heat Sink @ RTH<6.25°C/W
- Tube Packaging Available

### APPLICATIONS

- Frequency Conversion
- High Frequency Balancing
- Snubbers

### CHARACTERISTICS

| | |
|---|---|
| **Resistance Range** | 0.05Ω to 10KΩ, other values available upon request |
| **Tolerance** | <0.1Ω: 5% only<br>0.1Ω-1MΩ: 5% std.; 1% available |
| **Temperature Coefficient** | Referenced to 25°C, ΔR taken at +105°C;<br>1 to 10Ω: ±(100ppm+0.002Ω)/°C<br>10Ω & up: ±50ppm/°C |
| **Max Operating Voltage** | 350V |
| **Dielectric Strength** | 1,800 VAC |
| **Power Rating** | 20W @ 25°C case temperature; see derating curve, below |
| **Insulation Resistance** | 10GΩ min. |
| **Momentary Overload** | 2x rated power for 5 seconds where applied voltage ≤1.5 times max. operating voltage. ΔR ±(0.3% + 0.001Ω) max. |
| **Case Material** | KMC-125 epoxy |
| **Terminal Material** | Copper |
| **Terminal Plating** | Lead Free Solder (97% Tin, 3% Silver) |
| **Mounting** | Requires the use of a snap-on style heat sink. A thermal compound should be properly applied. |
| **Solder Process** | The TAH20 cannot exceed 260°C for more than 10 seconds during soldering process. |

| | | |
|---|---|---|
| **Load Life** | MIL-R-39009, 2000 Hours @ Rated Pwr | ΔR = ±(1.0% + 0.001) Ω |
| **Thermal Shock** | MIL-R-STD-202, Method 107, Cond. F | ΔR = ±(0.3% + 0.001) Ω max |
| **High Freq Vibration** | MIL-R-STD-202, Method 204, Cond. D | ΔR = ±(0.2% + 0.001) Ω max |
| **Terminal Strength** | MIL-R-STD-202, Method 211, Cond. A (Pull Test) 2.4N | ΔR = ±(0.2% + 0.001) Ω max |
| **Moisture Resistance** | MIL-R-STD-202, Method 106 | ΔR = ±(0.5% + 0.01) Ω max |

### Derating

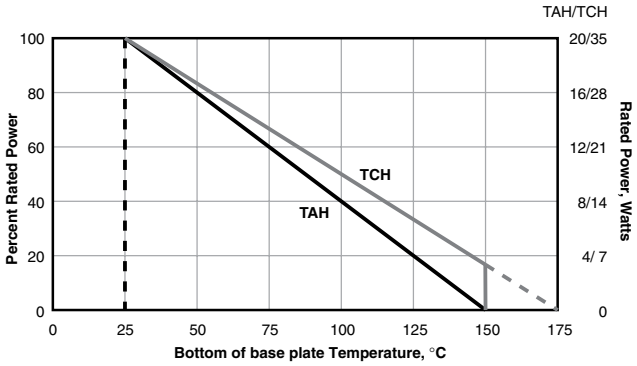


(continued)

# TAH Series

## 20 Watt TO220 Package
## Thick Film Power

## DIMENSIONS

(iin./mm)

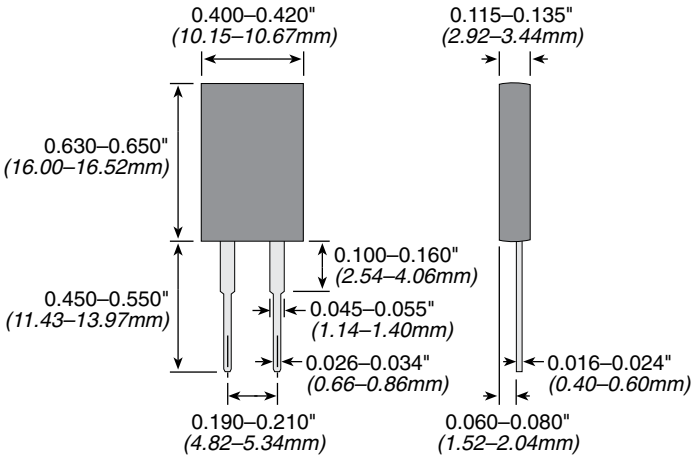


## ORDERING INFORMATION

**Tolerance**
F = 1%
J = 5% Standard

**Package Code**

**T A H 2 0 P 1 0 R 0 J E**

**Series**

**Ohm Value**
Example:
2R40 = 2.4 Ohms
2K40 = 2400 Ohms

**RoHS Compliant**
Non-compliant
version unavailable

### Standard Part Numbers

| | | | | |
|---|---|---|---|---|
| TAH20P100RJE | TAH20P220RJE | TAH20P33R0JE | TAH20P4R70JE | TAH20PR100JE |
| TAH20P10K0JE | TAH20P22R0JE | TAH20P390RJE | TAH20P510RJE | TAH20PR150JE |
| TAH20P10R0JE | TAH20P240RJE | TAH20P39R0JE | TAH20P51R0JE | TAH20PR200JE |
| TAH20P150RJE | TAH20P24R0JE | TAH20P3K30JE | TAH20P5K10JE | TAH20PR220JE |
| TAH20P15R0JE | TAH20P2K00JE | TAH20P3K90JE | TAH20P5R10JE | TAH20PR240JE |
| TAH20P1K00JE | TAH20P2K20JE | TAH20P3R30JE | TAH20P750RJE | TAH20PR330JE |
| TAH20P1K50JE | TAH20P2K40JE | TAH20P3R90JE | TAH20P75R0JE | TAH20PR390JE |
| TAH20P1R00JE | TAH20P2R00JE | TAH20P470RJE | TAH20P7K50JE | TAH20PR470JE |
| TAH20P1R50JE | TAH20P2R20JE | TAH20P47R0JE | TAH20P7R50JE | TAH20PR510JE |
| TAH20P200RJE | TAH20P2R40JE | TAH20P4K70JE | TAH20PR050JE | TAH20PR750JE |
| TAH20P20R0JE | TAH20P330RJE | | | |

**THIS PRODUCT IS DESIGNED FOR USE WITH PROPER HEATSINKING.**
Maximum base plate temperature of the resistor must be monitored and kept within specified limits to establish the power rating. Best technique is to attach a thermocouple to the side of the base plate of the resistor. Temperature of plastic housing or heat sink cannot be used to establish rating of the resistor.