THIS DRAWING IS UNPUBLISHED. RELEASED FOR PUBLICATION 20
© COPYRIGHT 20 BY - ALL RIGHTS RESERVED.

LOC	DIST
GP	00

REVISIONS

P	LTR	DESCRIPTION	DATE	DWN	APVD
	A1	REVISED PER ECO-12-011792	20JUL2012	KH	AS

1. HOUSING: LCP, UL94V0, COLOR: BLACK.
   CONTACT: PHOSPHOR BRONZE.
   POST: BRASS WIRE
2. CONTACT: 0.76µm MIN GOLD IN PAD CONTACT AREA
   1.27µm MIN TIN-LEAD ON PCB TAIL
   OVER 1.27µm MIN NICKEL OVER ALL.
   POST 1.27µm MIN NICKEL PLATED.
3. PLATE THROUGH HOLE PER 114-13056, FIGURE 4.
4. SEE TABLE 1 FOR INTERCONNECTIONS TO BACKPLANE CONNECTOR.
5. CONTACT: 0.76µm MIN GOLD IN PAD CONTACT AREA
   1.27µm MIN TIN ON PCB TAIL
   OVER 1.27µm MIN NICKEL OVER ALL.
   POST 1.27µm MIN NICKEL PLATED.
6. CONTACT: 1.27µm MIN GOLD IN PAD CONTACT AREA
   1.27µm MIN TIN-LEAD ON PCB TAIL
   OVER 1.27µm MIN NICKEL OVER ALL.
   POST 1.27µm MIN NICKEL PLATED.
7. CONTACT: 1.27µm MIN GOLD IN PAD CONTACT AREA
   1.27µm MIN TIN ON PCB TAIL
   OVER 1.27µm MIN NICKEL OVER ALL.
   POST 1.27µm MIN NICKEL PLATED.

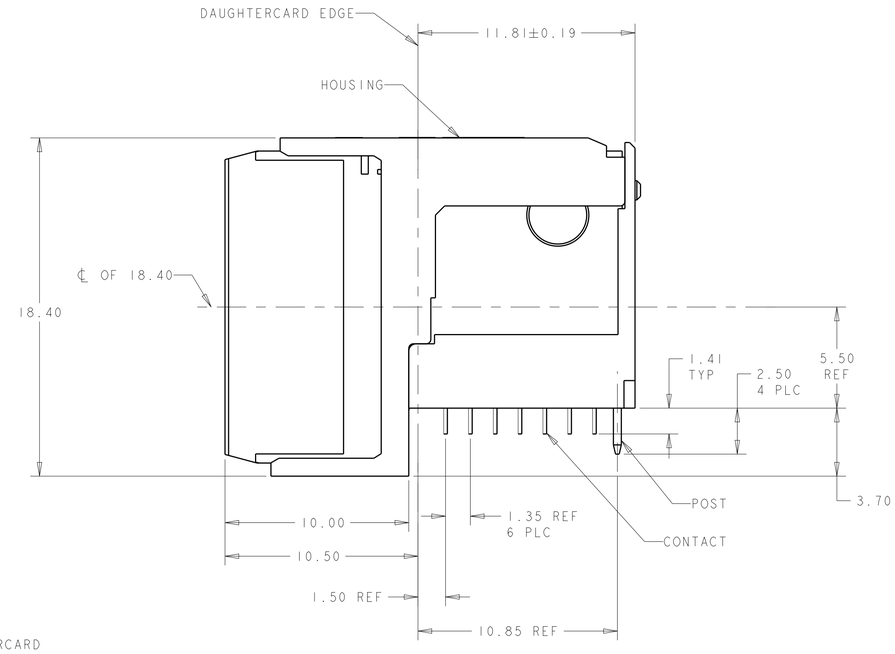

TABLE 1

INTERCONNECTIONS WITH BACKPLANE CONNECTOR 1410142

TYPICAL INTERCONNECTIONS FOR EACH COLUMN (WAFER): 1-16		
CONTACT USAGE	DAUGHTERCARD CONNECTOR PIN	BACKPLANE CONNECTOR PIN
SIGNAL	ax	bx
SIGNAL	bx	cx
SIGNAL	dx	ex
SIGNAL	fx	gx
SIGNAL	gx	hx
GROUNDS	cx, ex, (ALL COMMONED)	ax, dx, fx, ix

NOTE: "x" DESIGNATES THE COLUMN NUMBER

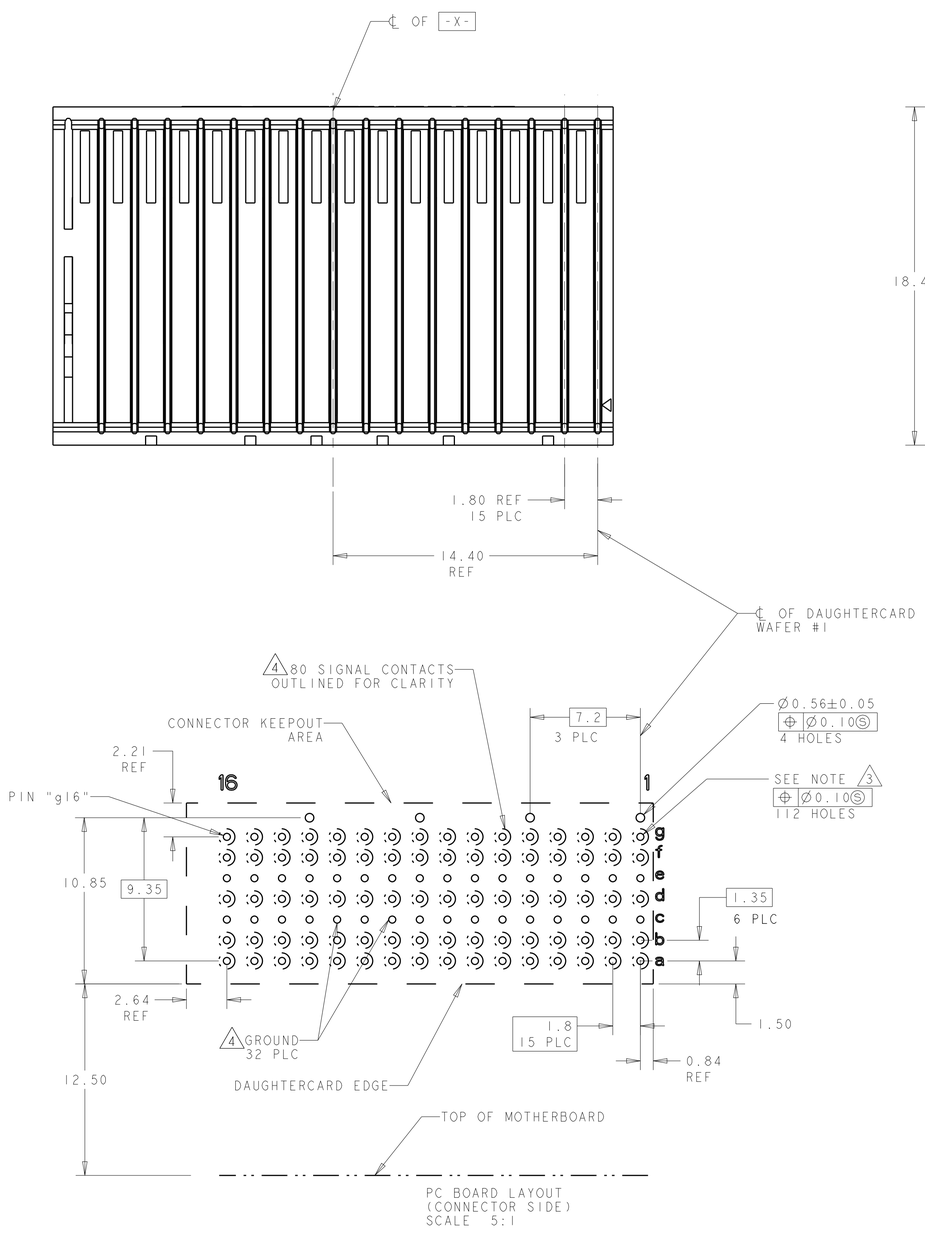

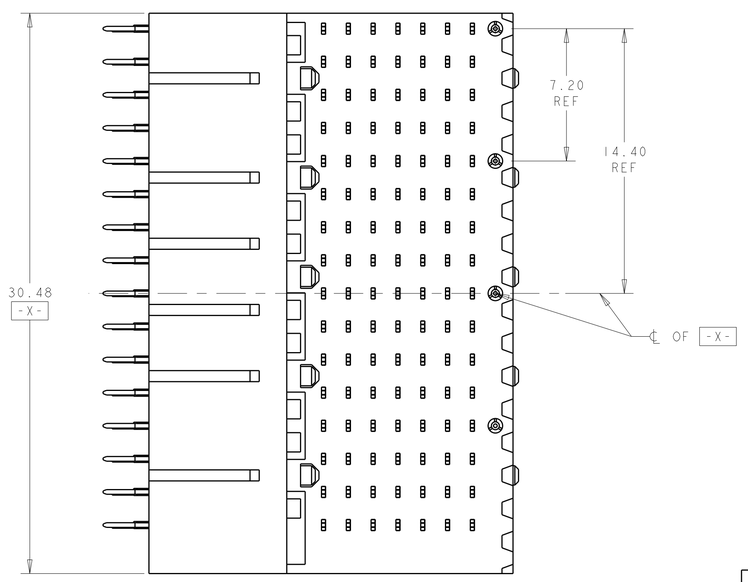

7	1410191-4
6	1410191-3
5	1410191-2
2	1410191-1
PLATING	PART NO

THIS DRAWING IS A CONTROLLED DOCUMENT.

DIMENSIONS: mm

TOLERANCES UNLESS OTHERWISE SPECIFIED:
0 PLC ±-
1 PLC ±0.5
2 PLC ±0.13
3 PLC ±-
4 PLC ±-
ANGLES ±1°0'

MATERIAL - 1

FINISH - SEE TABLE

DWN L.SIPE 01JUN2004
CHK J.CONSOLI 01JUN2004
APVD G.GRIFFITH 14MAR2006

PRODUCT SPEC 108-2072
APPLICATION SPEC 114-13056
WEIGHT -

TE Connectivity

NAME RIGHT-ANGLE PLUG ASSEMBLY, 7 ROW, RIGHT END, 20.3mm, SINGLE ENDED, MultiGig RT2, DAUGHTERCARD CONNECTOR

SIZE A1 | CAGE CODE 00779 | DRAWING NO C-1410191 | RESTRICTED TO -

CUSTOMER DRAWING | SCALE 3:1 | SHEET 1 OF 1 | REV A1

4805 (3/11)