KOA SPEER ELECTRONICS, INC.

# SR73

## lo-ohm 0.5%, 1%, 2%, 5% tolerance thick film current sense resistor

EU RoHS COMPLIANT

## features

- Marking: 1H: no marking on black protective coating
  1E, 1J: No marking on indigo protective coating.
  2A~W3A: three or four digit marking on indigo protective coating.
- Products with lead-free terminations meet EU RoHS requirements. EU RoHS regulation is not intended for Pb-glass contained in electrode, resistor element and glass.
- AEC-Q200 Qualified: 0402 (1E), 0603 (1J), 0805 (2A), 1206 (2B), 1210 (2E), 2010 (2H/W2H), 2512 (3A/W3A)

## dimensions and construction

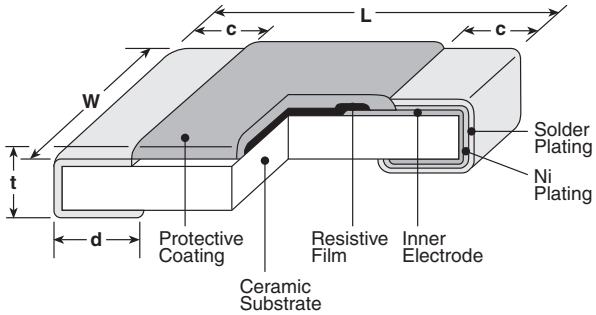


| Type (Inch Size Code) | Dimensions inches (mm) L | W | c | d | t |
|---|---|---|---|---|---|
| 1H (0201) | .024±.001 (0.6±0.03) | .012±.001 (0.3±0.03) | .004±.002 (0.1±0.05) | .006±.002 (0.15±0.05) | .009±.001 (0.23±0.03) |
| 1E (0402) | .039 +.004 -.002 (1.0 +0.1 -0.05) | .02 +.004 -.002 (0.5 +0.1 -0.05) | .01±.004 (0.25±0.1) | .01±.004 (0.25±0.1) | .014±.002 (0.35±0.05) |
| 1J (0603) | .063±.008 (1.6±0.2) | .031 +.006 -.004 (0.8 +0.15 -0.1) | .014±.004 (0.35±0.1) | .014±.004 (0.35±0.1) | .018±.004 (0.45±0.1) |
| 2A (0805) | .079±.008 (2.0±0.2) | .049±.004 (1.25±0.1) | .016±.008 (0.4±0.2) | .012 +.008 -.004 (0.3 +0.2 -0.1) | .02±.004 (0.5±0.1) |
| 2B (1206) | .126±.008 (3.2±0.2) | .063±.008 (1.6±0.2) | .02±.012 (0.5±0.3) | .016 +.008 -.004 (0.4 +0.2 -0.1) | .024±.004 (0.6±0.1) |
| 2E (1210) | | .102±.008 (2.6±0.2) | | | |
| 2H (2010) | .197±.008 (5.0±0.2) | .098±.008 (2.5±0.2) | | | |
| W2H (2010) | | | | .026±.006 (0.65±0.15) | |
| 3A (2512) | .248±.008 (6.3±0.2) | .122±.008 (3.1±0.2) | | .016 +.008 -.004 (0.4 +0.2 -0.1) | |
| W3A (2512) | | | | .026±.006 (0.65±0.15) | |

## ordering information

New Part # SR73 2B T TD 1R00 F

**Type**: SR73

**Size**: 1H, 1E, 1J, 2A, 2B, 2E, W2H, W3A, 2H, 3A

**Termination Material**
- T: Sn
- L: SnPb (1E, 1J, 2A, 2B, 2E, 2H, 3A)
- G: Au (1J, 2A, 2B: 0.1Ω - 10Ω - contact factory)

**Packaging**
- TCM: 0201 only: 7" 2mm pitch pressed paper
- TPL:0402 only: 2mm pitch punch paper
- TP: 0402, 0603, 0805: 7" 2mm pitch punch paper
- TD: 0603, 0805, 1206, 1210: 7" 4mm pitch punched paper
- TDD: 0603, 0805, 1206, 1210: 10" paper tape
- TE: 0805, 1206, 1210, 2010 & 2512: 7" embossed plastic
- TED: 0805, 1206, 1210, 2010 & 2512: 10" embossed plastic

For further information on packaging, please refer to Appendix A

**Nominal Resistance**
- ±2%, ±5%: 2 significant figures + 1 multiplier "R" indicates decimal on value <10Ω
- ±1%: 3 significant figures + 1 multiplier "R" indicates decimal on value <100Ω
- All values less than 0.1Ω (100mΩ) are expressed in mΩ with "L" as decimal Example: 20mΩ = 20L (3-digit)

**Tolerance**
- D: ±0.5%
- F: ±1%
- G: ±2%
- J: ±5%

Specifications given herein may be changed at any time without prior notice. Please confirm technical specifications before you order and/or use. 12/16/14

## applications and ratings

| Part Designation* | Power Rating @ 70°C | T.C.R. (ppm/°C) Max. | Resistance Range E-24, E-96 (D±0.5%) | E-24, E-96 (F±1%) | E-24 (G±2%) | E-24 (J±5%) | Absolute Maximum Working Voltage | Maximum Overload Voltage (5 Secs. Max.) | Rated Terminal Part Temp. | Operating Temp. Range |
|---|---|---|---|---|---|---|---|---|---|---|
| SR731H (0201) | 0.1W | 0 - ±500 | — | — | — | 0.18Ω - 0.24Ω | 1.0V | 2.5V | — | -55°C to +125°C |
| | | 0 - ±400 | | 1Ω - 10Ω** | | 0.27Ω - 10Ω | | | | |
| SR731E (0402) | 1/8W (.125W) 1/6W (.166W[1]) | ±200 | — | 0.51Ω - 10Ω** | 0.51Ω - 10Ω | 0.51Ω - 10Ω | 1.11V | 2.79V | 125°C | -55°C to +150°C |
| | | ±250 | — | 0.2Ω - 0.47Ω** | 0.2Ω - 0.47Ω | 0.2Ω - 0.47Ω | | | | |
| | | ±300 | — | 0.1Ω - 0.18Ω** | 0.1Ω - 0.18Ω | 0.1Ω - 0.18Ω | | | | |
| SR731J (0603) | 1/5W (.2W) | ±200 | — | 0.1Ω - 10Ω | 0.1Ω - 10Ω | 0.1Ω - 10Ω | 1.41V | 3.53V | | |
| SR732A (0805) | 1/4W (.25W) 1/3W (.33W[1]) | ±100 | 0.15Ω - 10Ω | 0.1Ω - 10Ω | — | — | 1.58V | 3.95V | | |
| | | ±200 | — | — | 0.1Ω - 10Ω | 0.1Ω - 10Ω | | | | |
| | | ±500 | — | — | — | 0.051Ω - 0.091Ω | | | | |
| | | ±800 | — | — | — | 0.030Ω - 0.047Ω | | | | |
| SR732B (1206) | 1/3W (.33W) 1/2W (.5W[1]) | ±100 | 0.15Ω - 10Ω | 0.1Ω - 10Ω | — | — | 1.81V | 4.54V | | |
| | | ±200 | — | — | 0.1Ω - 10Ω | 0.1Ω - 10Ω | | | | |
| | | ±500 | — | — | — | 0.056Ω - 0.091Ω | | | | |
| | | ±800 | — | — | — | 0.030Ω - 0.051Ω | | | | |
| SR732E (1210) | 1/2W (.5W) 2/3W (.66W[1]) | ±100 | — | 0.1Ω - 10Ω | — | — | 2.23V | 5.59V | | |
| | | ±200 | — | — | 0.1Ω - 10Ω | 0.047Ω - 10Ω | | | | |
| | | ±500 | — | — | — | 0.036Ω - 0.043Ω | | | | |
| | | ±1000 | — | — | — | 0.024Ω - 0.033Ω | | | | |
| SR732H/W2H[2] (2010) | 3/4W (.75W) | ±100 | — | 0.1Ω - 10Ω | — | — | 2.73V | 6.84V | | |
| | | ±200 | — | — | 0.1Ω - 10Ω | 0.1Ω - 10Ω | | | | |
| | | ±500 | — | — | — | 0.056Ω - 0.091Ω | | | | |
| | | ±800 | — | — | — | 0.033Ω - 0.051Ω | | | | |
| SR733A/W3A (2512) | 1W | ±100 | — | 0.1Ω - 10Ω | — | — | 3.16V | 7.90V | | |
| | | ±200 | — | — | 0.1Ω - 10Ω | 0.1Ω - 10Ω | | | | |
| | | ±500 | — | — | — | 0.056Ω - 0.091Ω | | | | |
| | | ±800 | — | — | — | 0.039Ω - 0.051Ω | | | | |

* Parentheses indicate EIA package size codes. ** 1H, 1E (F: ±1%) E-24 values only.

[1] Please refer to the "Higher Power Ratings" statement in the beginning of the catalog. Contact KOA prior to usage.

[2] SR73W3AS (2010 size, 1 Watt) with limited Resistance Range - contact factory for details.

Rated ambient temperature: +70°C Rated voltage = $\sqrt{\text{Power rating x resistance value}}$ or max. working voltage, whichever is lower

## environmental applications

### Derating Curve

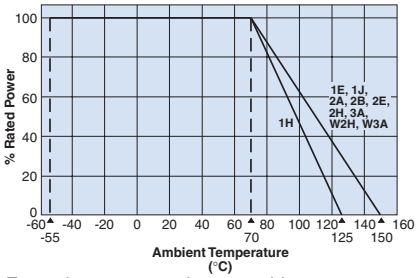


For resistors operated at an ambient temperature of 70°C or above, a power rating shall be derated in accordance with the derating curve.

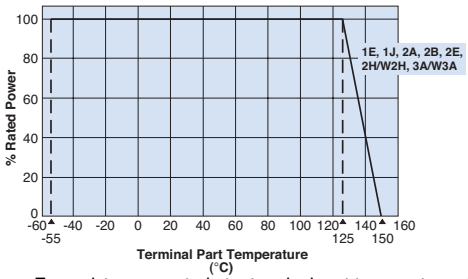


For resistors operated at a terminal part temperature of described for each size or above, a power rating shall be derated in accordance with the derating curve.

Please refer to "Introduction of the derating curve based on the terminal part temperature" on the beginning of our catalog before use.

### Performance Characteristics

| Parameter | Requirement Δ R ±(%+0.005Ω) Limit | Typical | Test Method |
|---|---|---|---|
| Resistance | Within specified tolerance | — | 25°C |
| T.C.R. | Within specified T.C.R. | — | +25°C/-55°C and +25°C/+125°C |
| Overload (Short time) | ±2% | ±0.5% | Rated voltage x 2.5 for 5 seconds |
| Resistance to Solder Heat | 1H: ±3%, 1E~W3A: ±1% | 1H: ±0.75% 1E~W3A: ±0.3% | 260°C ± 5°C, 10 seconds ± 1 second |
| Rapid Change of Temperature | ±1% | ±0.3% | -40°C (30 minutes), +125°C (30 minutes), 100 cycles |
| Moisture Resistance | 1H: ±3% 1E~W3A: ±2% | ±1% | 40°C ± 2°C, 90%-95% RH, 1000 hours, 1.5 hr ON, 0.5 hr OFF cycle |
| Endurance at 70°C | 1H: ±3% 1E~W3A: ±2% | ±1% | 70°C ± 2°C, 1000 hours, 1.5 hr ON, 0.5 hr OFF cycle |
| High Temperature Exposure | ±1% | ±0.3% | 1H: +125°C, 1000 hours; 1E, 1J, 2A, 2B, 2E, 2H/W2H, 3A/W3A:+150°C, 1000 hours |

**Specifications given herein may be changed at any time without prior notice. Please confirm technical specifications before you order and/or use.** 12/05/14