UTP

Full plastic circular connector

Description

"UTP" full plastic industrial circular connectors are a range of multiway connectors.
"UTP" provides the complete answer to the need for economical lightweight, robust circular connectors and is unique in offering a plastic bayonet coupling ring incorporating a metal wave spring, which locks with an audible positive "click".
It is available in 8 shell sizes, 10 insert arrangements all intermateable, interchangeable and intermountable with the TRIM TRIO "UT0" (full metal) and "UTG" (plastic with metal coupling ring) industrial connector families.

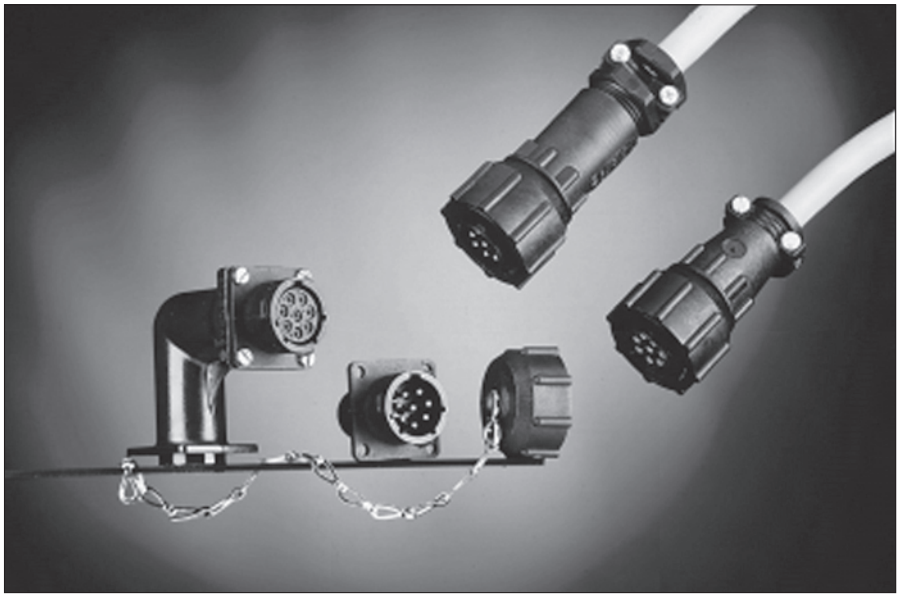

Features and benefits

- Available in 8 shell sizes and 10 insert arrangements incl. 2 VDE versions.
- Available in plug and receptacle versions for both male and female contacts.
- Connectors and accessories are moulded from highly durable glass-filled thermoplastic.
- Flammability rating: UL94-V0.
- Plastic bayonet ring:
  - Vibration proof thermoplast
  - Metal wave spring loaded.
  - Locks with audible positive "click"
  - UL recognized File Nr.: E238675

Performance characteristics

Operating temperature:	-55°C to +125°C
Insulation resistance:	5000 MΩ min.
Test potential:	2000 VAC
Durability:	250 matings and unmatings.

Degree of protection per DIN 40050: IP65 in mated condition. "H" version used with water protected backshells.

Construction

Connector, Bayonet ring and accessories
Gass filled thermoplast UL94-V0
Colour: black
Coupling spring: Spring steel

Contact accommodation

- "UTP" connectors accept TRIM TRIO size 16 removable snap-lock contacts (see contacts section)
- Contacts to be ordered seperately.

How to order

Connector family :		**UTP** **UTP**	**0** **6**	**14** **14**	**12** **12**	**P** **S**	**H**	**- -** **- -**
Body variation:	0 : Wall mounting receptacle 6 : Cable plug							
Shell size:								
Insert arrangement:								
Type of contacts:	P : Pin contacts S : Socket contacts							
Application	No letter : Standard version H : Water protected version (only receptacle)							
Design variation	No letter : Moulded-in contact marking (standard version) Others : Specials versions							

Cable plug for pin contacts (UTP6- - - -P)

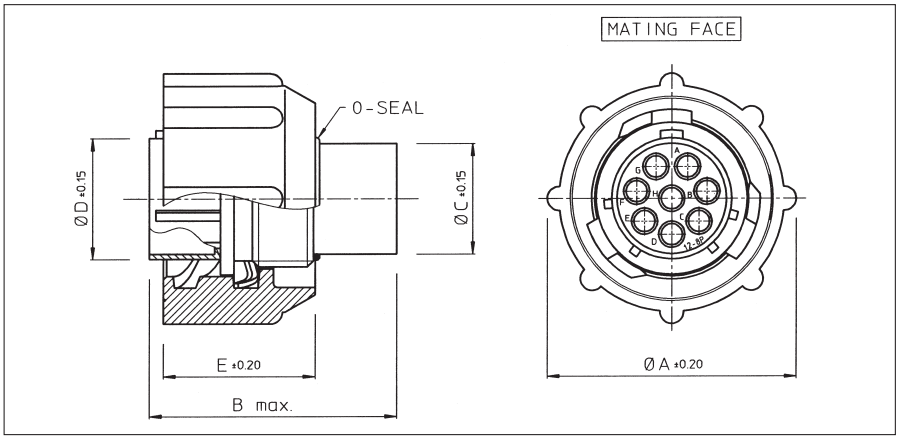

Part number	Shell size	Ø A ±0.2	B max.	Ø C ±0.15	Ø D ±0.15	Ø E ±0.2
UTP6104P / UTP6103PVDE	10	26.7	31.8	10.9	12.2	19.1
UTP6128P	12	31.4		13.8	15.1	
UTP61412P	14	34.5		17.0	18.3	
UTP61619P	16	37.8		19.9	21.5	
UTP61823P / UTP6187PVDEU	18	40.8	31.8 / 33.0	22.4	24.0	
UTP62028P	20	43.9	31.8	25.6	27.2	
UTP62235P	22	47.0		28.5	30.4	
UTP62448P	24	50.1		31.7	33.5	

Part numbers are suitable for both standard and IP65 water protection versions.

Cable plug for socket contacts (UTP6- - - -S)

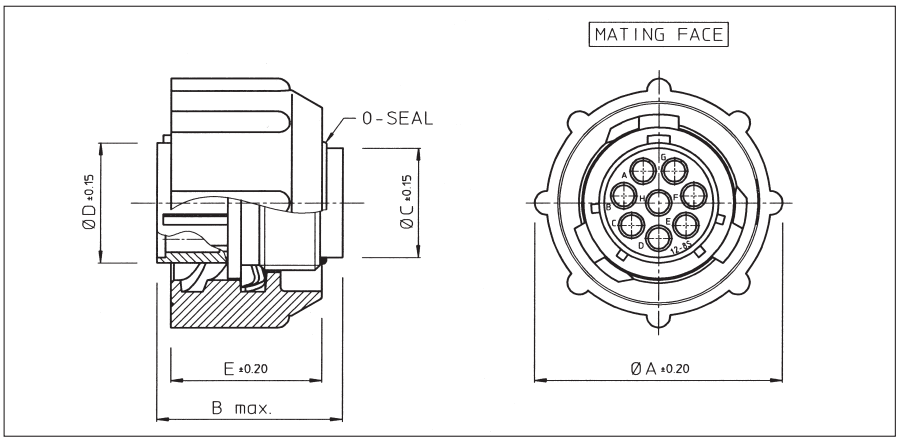

Part number	Shell size	Ø A ±0.2	B max.	Ø C ±0.15	Ø D ±0.15	Ø E ±0.2
UTP6104S / UTP6103SVDE	10	26.7	23.9 / 26.75	10.9	12.2	19.1
UTP6128S	12	31.4	23.9	13.8	15.1	
UTP61412S	14	34.5		17.0	18.3	
UTP61619S	16	37.8		19.9	21.5	
UTP61823S / UTP6187SVDEU	18	40.8	23.9 / 29.0	22.4	24.0	
UTP62028S	20	43.9	24.9	25.6	27.2	
UTP62235S	22	47.0		28.5	30.4	
UTP62448S	24	50.1	26.2	31.7	33.5	

Part numbers are suitable for both standard and IP65 water protection versions.

Wall mounting receptacle for pin contacts (UTP0- - - -P)

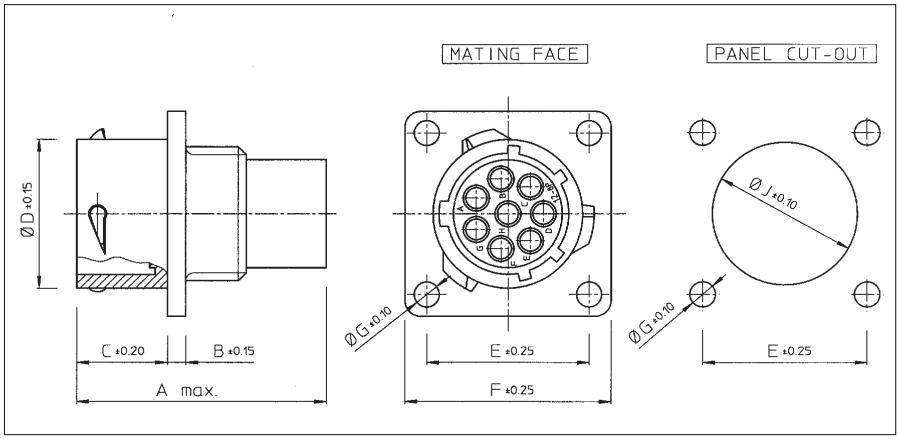

Part number	Shell size	A max.	B ±0.15	C ±0.2	Ø D ±0.15	E ±0.25	F •0.25	Ø G ±0.1	Ø J ±0.1
UTP0104P / UTP0103PVDE	10				15.0	18.3	23.8		15.1
UTP0128P	12		2.3		19.0	20.6	26.2		18.2
UTP01412P	14	31.7		11.3	22.2	23.0	28.6		21.4
UTP01619P	16				25.3	24.6	31.0	3.2	24.6
UTP01823P / UTP0187PVDEU	18	31.7/34.0	2.5	11.3/17.9	28.5	27.0	33.3		27.8
UTP02028P	20			14.5	31.7	29.4	36.5		30.9
UTP02235P	22	33.3	3.5		34.9	31.8	39.7		34.1
UTP02448P	24			15.3	38.0	34.9	42.9	3.9	37.3

For IP65 waterprotected version add “H” behind “P” e.g. UTP01412PH
A square flange sealing has to be ordered separately to guarantee a sealing with the equipment. Refer to “Circular accessories” section (UTFD--).

Wall mounting receptacle for socket contacts (UTP0- - - -S)

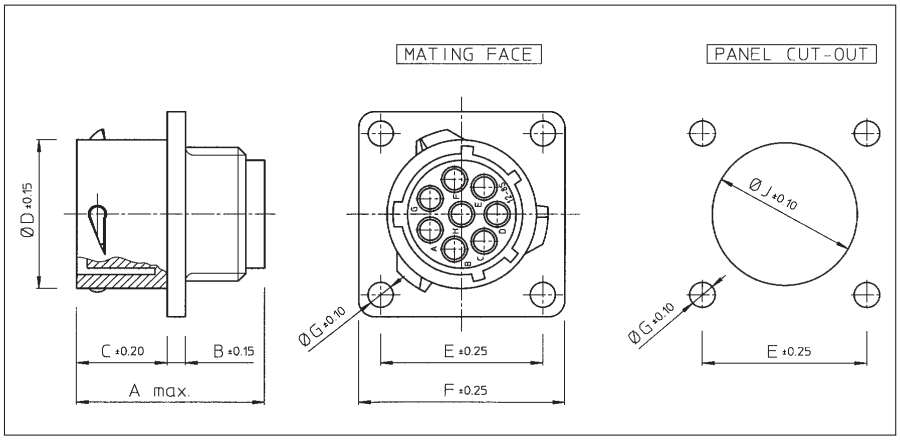

Part number	Shell size	A max.	B ±0.15	C ±0.2	Ø D ±0.15	E ±0.25	F •0.25	Ø G ±0.1	Ø J ±0.1
UTP0104S / UTP0103SVDE	10	24.3/27.6			15.0	18.3	23.8		15.1
UTP0128S	12		2.3		19.0	20.6	26.2		18.2
UTP01412S	14	24.3		11.3	22.2	23.0	28.6		21.4
UTP01619S	16				25.3	24.6	31.0	3.2	24.6
UTP01823S / UTP0187SVDEU	18	24.3/30.4	2.5	11.3/17.9	28.5	27.0	33.3		27.8
UTP02028S	20	27.0		14.5	31.7	29.4	36.5		30.9
UTP02235S	22	28.0	3.5		34.9	31.8	39.7		34.1
UTP02448S	24	30.4		15.3	38.0	34.9	42.9	3.9	37.3

For IP65 waterprotected version add “H” behind “S” e.g. UTP01412SH
A square flange sealing has to be ordered separately to guarantee a sealing with the equipment. Refer to “Circular accessories” section (UTFD--).

Plastic cable clamp with strain relief (UTG--AC)

Suitable for UTP-UTG

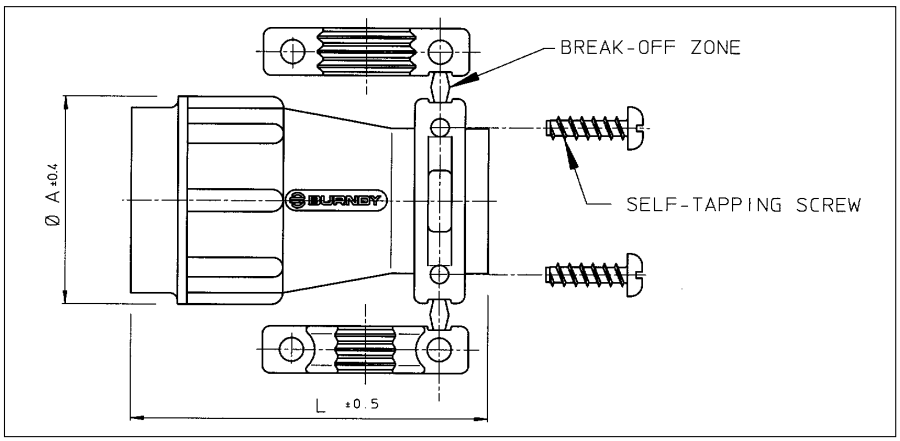

Part number	Shell size	Cable range Ø	Ø A ± 0.4	L ± 0.5
UTG10AC	10	3.0 - 8.7	21.0	40.0
UTG12AC	12	3.0 - 12.8	24.0	40.0
UTG14AC	14	4.0 - 13.8	27.0	46.0
UTG16AC	16	5.0 - 17.0	30.2	46.0
UTG18AC	18	5.0 - 19.0	33.3	50.0
UTG20AC	20	5.0 - 21.0	36.5	55.0
UTG22AC	22	5.0 - 23.0	39.7	60.0
UTG24AC	24	8.0 - 27.0	42.9	65.0

For threading specifications see last page of this section “Circular accessories”

Plastic cable clamp with strain relief nut for waterprotected (IP65) applications (UTG--PG)

Suitable for UTP-UTG

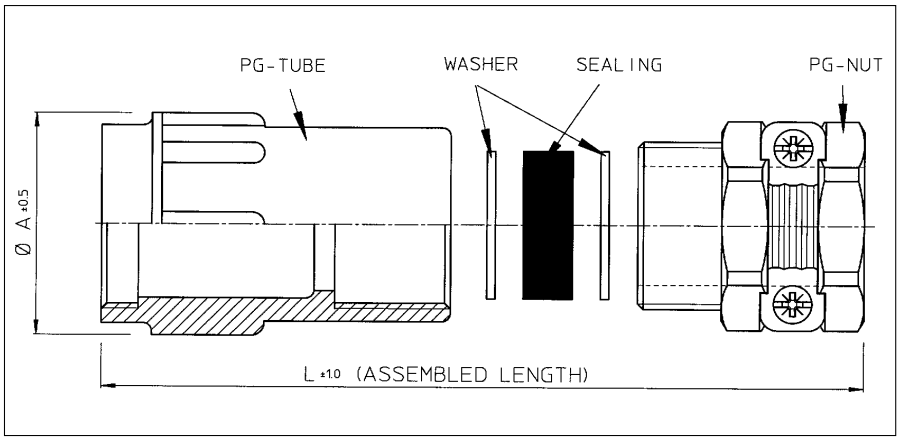

Part number	Shell size	Sealing* outer dia x inner dia’s	L ± 1	A ± 0.5
UTG10PG	10	13.5 x 5 x 8	54	21.0
UTG12PG	12	16 x 7 x 10.5 x 13 x 16	57	24.0
UTG14PG	14	18.5 x 7 x 105 x 13 x 16	62	27.0
UTG16PG	16	20.5 x 8 x 10.5 x 13 x 16	68	30.2
UTG18PG	18	20.5 x 8 x 10.5 x 13 x 16	71	33.3
UTG20PG	20	26 x 11 x 15 x 18 x 22	82	36.5
UTG22PG	22	26 x 11 x 15 x 18 x 22	88	39.7
UTG24PG	24	35 x 19 x 23 x 27 x 31	103	42.9

*In order to accommodate different cable dia’s, the sealing exisits of different layers which can be pulled out easily.
Cable clamp has a PG style cable gland. For threading specifications see last page of this section “Circular accessories”

Plastic cable clamp with strain relief nut for waterprotected (IP65) applications (UTG--ST)

Suitable for UTP-UTG

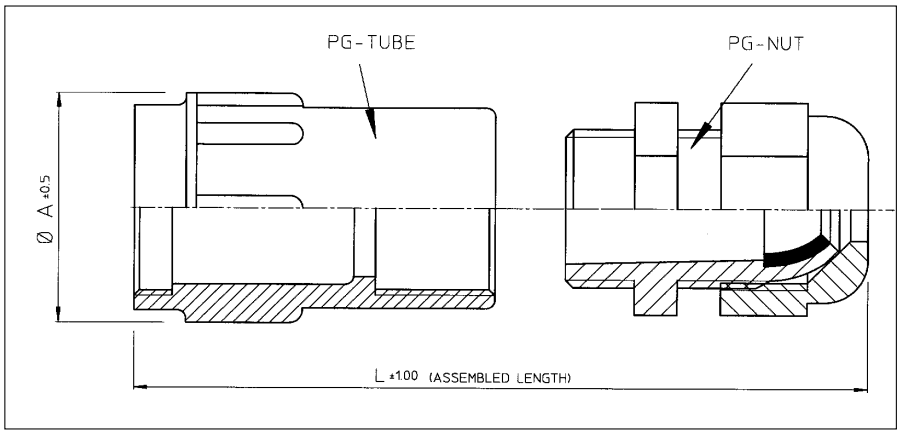

Part number	Shell size	Cable range	Dia. A ± 0.5	L ± 1
UTG10ST	10	2 - 6	21.0	64
UTG12ST	12	3 - 7	24.0	64
UTG14ST	14	6 - 9	27.0	69
UTG16ST	16	7 - 12	30.2	72
UTG18ST	18		33.3	76
UTG20ST	20	9 - 16	36.5	80
UTG22ST	22		39.7	86
UTG24ST	24	13 - 20	42.9	91

Cable clamp has a PG style cable gland. For threading specifications see last page of this section “Circular

Metal cable clamp with strain relief (UT0--AC)

Suitable for UT0-UT0W

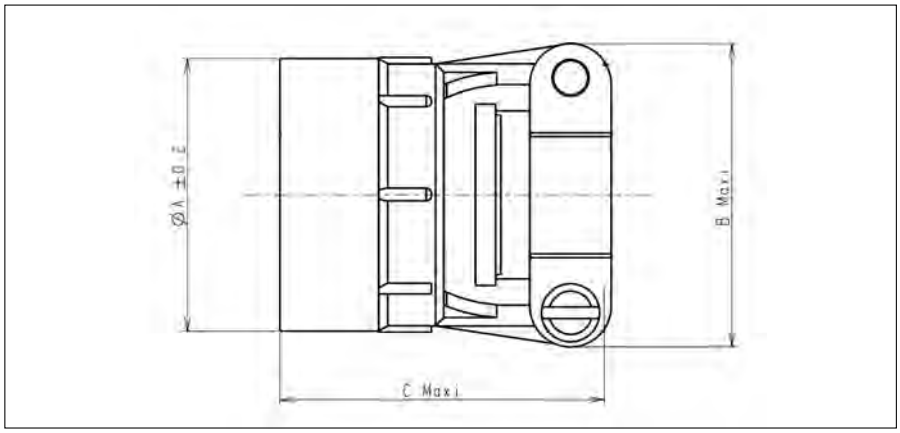

Part number	Shell size	Max cable dia. Excl. sealing	Ø A±0.2	B maxi	C maxi
UT010AC	10	5.0	16.3	21.6	31.0
UT012AC	12	8.2	19.4	25.0	31.5
UT014AC	14	10.0	22.5	27.4	34.0
UT016AC	16	13.0	25.8	29.4	34.0
UT018AC	18	16.0	29.2	35.2	31.4
UT020AC	20	16.0	32.5	35.2	32.0
UT022AC	22	19.3	35.7	41.1	31.0
UT024AC	24	20.6	38.8	42.4	31.0

For threading specifications see last page of this section “Circular accessories”

Short cable clamp with strain relief nut for waterprotected applications (IP68). (UT0--JCS)
Long cable clamp with strain relief nut for waterprotected applications (IP68). (UT0--JC)

Suitable for UT0-UT0W

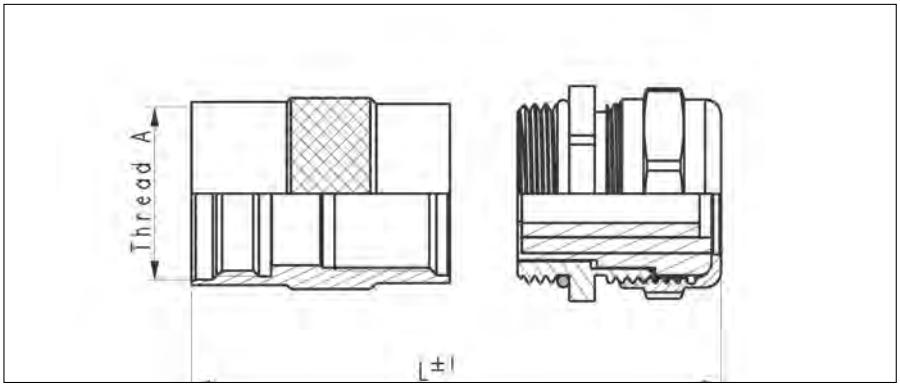

Part number		Shell size	Clamping range (Ø en mm) min / max	L± 1		Thread A
Short version	Long version			Short version	Long version	
UT010JCS	UT010JC	10	03 / 06	48.5	60.5	9/16 – 24 UNEF Class 2A
UT012JCS	UT012JC	12	06 / 10	49.5	61.5	11/16 – 24 UNEF Class 2A
UT014JCS	UT014JC	14	06 / 10	53.5	67.5	13/16 – 20 UNEF Class 2A
UT016JCS	UT016JC	16	9.5 / 14	62.5	73.5	15/16 – 20 UNEF Class 2A
UT018JCS	UT018JC	18	9.5 / 14	65.5	76.0	1″ 1/16 – 18 UNEF Class 2A
UT020JCS	UT020JC	20	11.5 / 18	70.5	84.0	1″ 3/16 – 18 UNEF Class 2A
UT022JCS	UT022JC	22	11.5 / 18	76.5	88.0	1″ 5/16 – 18 UNEF Class 2A
UT024JCS	UT024JC	24	11.5 / 18	82.0	92.0	1″ 7/16 – 18 UNEF Class 2A

Cable clamp has a Metric style cable gland. For threading specifications see last page of this section “Circular accessories”

Short cable clamp with large strain relief nut for waterprotected applications (IP68). (UT0--JCSL)
Long cable clamp with large strain relief nut for waterprotected applications (IP68). (UT0--JCL)

Suitable for UT0-UT0W

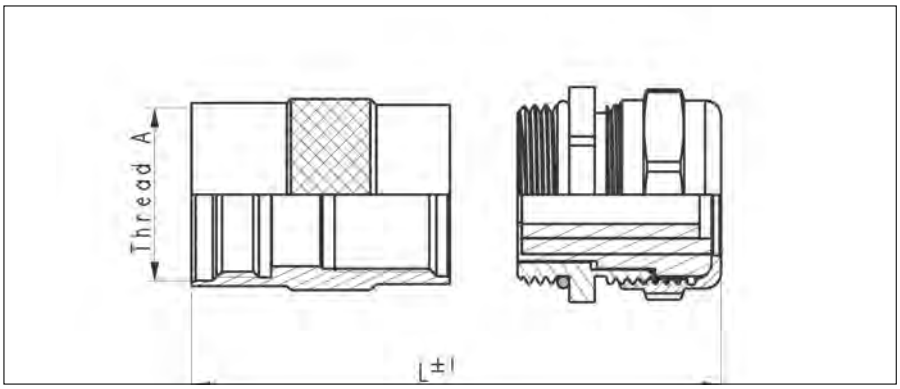

Part number		Shell size	Clamping range (Ø en mm) min / max	L± 1		Thread A
Short version	Long version			Short version	Long version	
UT010JCSL	UT010JCL	10	05 / 08	49.5	61.5	9/16 – 24 UNEF Class 2A
UT012JCSL	UT012JCL	12	08 / 12	49.5	62.5	11/16 – 24 UNEF Class 2A
UT014JCSL	UT014JCL	14	08 / 12	54.5	68.5	13/16 – 20 UNEF Class 2A
UT016JCSL	UT016JCL	16	11.5 / 18	68.5	79.5	15/16 – 20 UNEF Class 2A
UT018JCSL	UT018JCL	18	11.5 / 18	71.5	82.0	1″ 1/16 – 18 UNEF Class 2A
UT020JCSL	UT020JCL	20	15 / 24	77.5	91.0	1″ 3/16 – 18 UNEF Class 2A
UT022JCSL	UT022JCL	22	15 / 24	83.5	95.0	1″ 5/16 – 18 UNEF Class 2A
UT024JCSL	UT024JCL	24	15 / 24	89.0	99.0	1″ 7/16 – 18 UNEF Class 2A

Cable clamp has a Metric style cable gland. For threading specifications see last page of this section “Circular accessories”

Short shielded cable clamp with strain relief nut for waterprotected applications (IP68). (UT0S----JCS)
Long shielded cable clamp with strain relief nut for waterprotected applications (IP68). (UT0S----JC)

Suitable for UT0-UT0W

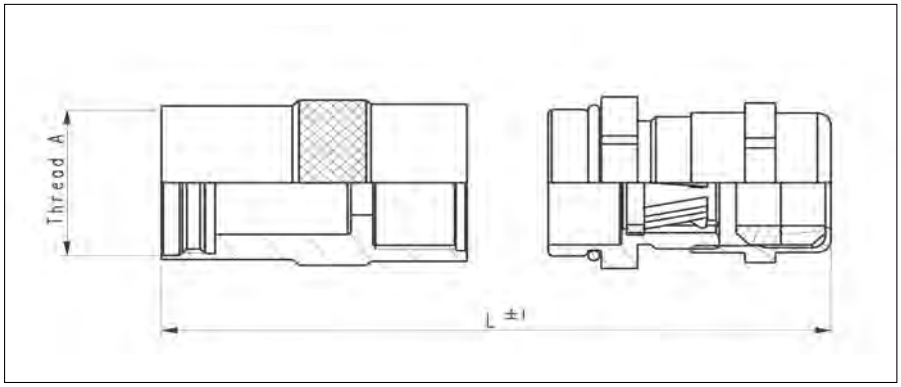

Part number		Shell size	Clamping range (Ø en mm) min / max	L± 1		Thread A
Short version	Long version			Short version	Long version	
UT0S10JCS	UT0S10JC	10	04 / 6.5	58.5	70.5	9/16 – 24 UNEF Class 2A
UT0S12JCS	UT0S12JC	12	07 / 10.5	61.5	74.5	11/16 – 24 UNEF Class 2A
UT0S14JCS	UT0S14JC	14	07 / 10.5	66.5	80.5	13/16 – 20 UNEF Class 2A
UT0S16JCS	UT0S16JC	16	10 / 14.5	72.5	83.5	15/16 – 20 UNEF Class 2A
UT0S18JCS	UT0S18JC	18	10 / 14.5	75.5	86.0	1″ 1/16 – 18 UNEF Class 2A
UT0S20JCS	UT0S20JC	20	13.5 / 18	84.5	97.5	1″ 3/16 – 18 UNEF Class 2A
UT0S22JCS	UT0S22JC	22	13.5 / 18	90.0	101.5	1″ 5/16 – 18 UNEF Class 2A
UT0S24JCS	UT0S24JC	24	13.5 / 18	95.5	105.5	1″ 7/16 – 18 UNEF Class 2A

Cable clamp has a Metric style cable gland. For threading specifications see last page of this section “Circular accessories”

Short shielded cable clamp with large strain relief nut for waterprotected applications (IP68). (UT0S----JCSL)
Long shielded cable clamp with large strain relief nut for waterprotected applications (IP68). (UT0S----JCL)

Suitable for UT0-UT0W

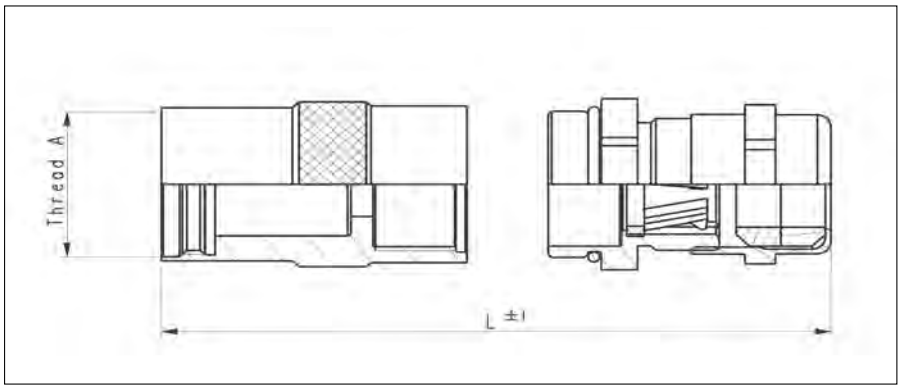

Part number		Shell size	Clamping range (Ø en mm) min / max	L± 1		Thread A
Short version	Long version			Short version	Long version	
UT0S10JCSL	UT0S10JCL	10	05 / 8.5	59.5	71.5	9/16 – 24 UNEF Class 2A
UT0S12JCSL	UT0S12JCL	12	08 / 12.5	61.5	74.5	11/16 – 24 UNEF Class 2A
UT0S14JCSL	UT0S14JCL	14	08 / 12.5	66.5	80.5	13/16 – 20 UNEF Class 2A
UT0S16JCSL	UT0S16JCL	16	13.5 / 18	82.5	93.5	15/16 – 20 UNEF Class 2A
UT0S18JCSL	UT0S18JCL	18	13.5 / 18	85.5	96.0	1″ 1/16 – 18 UNEF Class 2A
UT0S20JCSL	UT0S20JCL	20	17 / 24	93.0	106.5	1″ 3/16 – 18 UNEF Class 2A
UT0S22JCSL	UT0S22JCL	22	17 / 24	99.0	110.5	1″ 5/16 – 18 UNEF Class 2A
UT0S24JCSL	UT0S24JCL	24	17 / 24	104.5	114.5	1″ 7/16 – 18 UNEF Class 2A

Cable clamp has a Metric style cable gland. For threading specifications see last page of this section “Circular accessories”

Metal right angle cable clamp with strain relief nut (UTG--LPGN / UTO--LPGN)

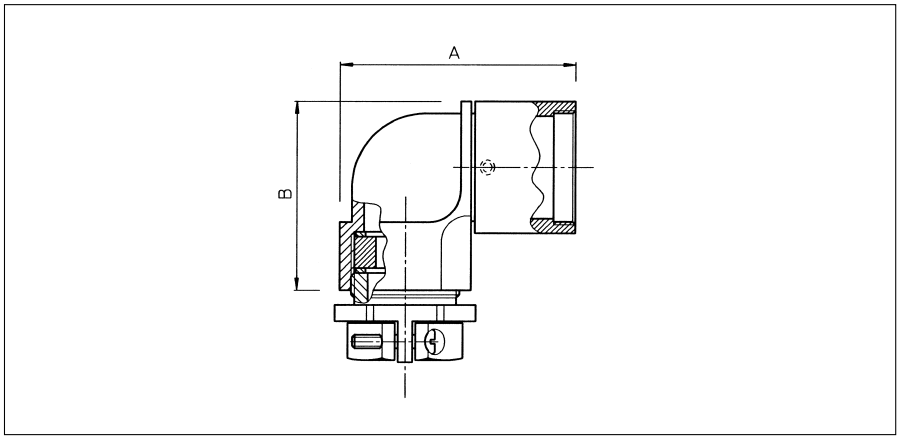

Part number For UTP / UTG	Part number For UTO / UTOW	Shell size	A max	B max	Cable range
UTG10LPGN	**UTO10LPGN**	**10**	48.0	30.0	13.5 x 5 x 8
UTG12LPGN	**UTO12LPGN**	**12**	50.0	33.5	16 x 7 x 10.5 x 13
UTG14LPGN	**UTO14LPGN**	**14**	52.0	36.5	18.5 x 7 x 10.5 x 13 x 16
UTG16LPGN	**UTO16LPGN**	**16**	55.0	39.5	20.5 x 8 x 10.5 x 13 x 16
UTG18LPGN	**UTO18LPGN**	**18**	60.0	46.0	20.5 x 8 x 10.5 x 13 x 16
UTG20LPGN	**UTO20LPGN**	**20**	58.0	47.0	26 x 11 x 15 x 18 x 22
UTG22LPGN	**UTO22LPGN**	**22**	58.0	48.5	26 x 11 x 15 x 18 x 22
UTG24LPGN	**UTO24LPGN**	**24**	67.0	54.5	35 x 19 x 23 x 27 x 31

Cable clamp has a PG style cable gland. For threading specifications see last page of this section “Circular accessories”

Metal shrink boot adaptor (UTG--AD) for UTP and UTG

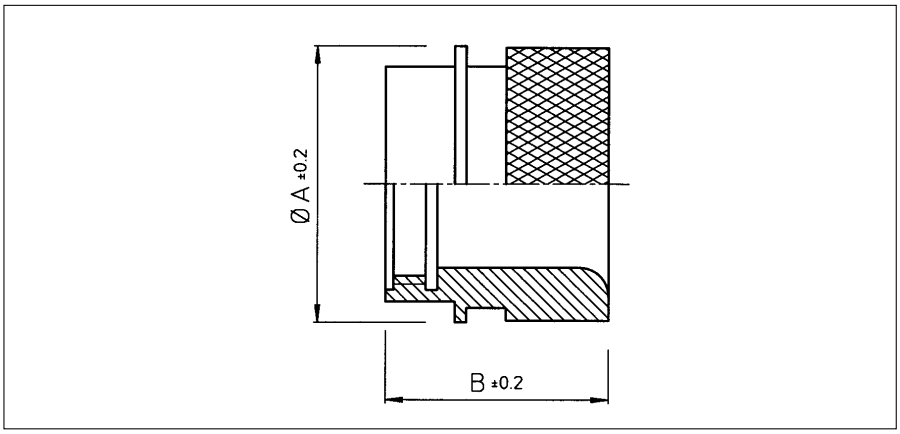

Part number	Shell size	Ø A$^{\pm 0.2}$	B
UTG10AD	**10**	21.0	19.2
UTG12AD	**12**	24.0	
UTG14AD	**14**	27.0	
UTG16AD	**16**	30.0	21.5
UTG18AD	**18**	33.3	
UTG20AD	**20**	36.5	22.8
UTG22AD	**22**	39.7	
UTG24AD	**24**	42.9	21.9

Standard plating is anodised black. For tin plating add “T” at the end of the part number e.g. UTG12ADT
For threading specifications see last page of this section “Circular accessories”

Metal shrink boot adaptor for UTO and UTOW

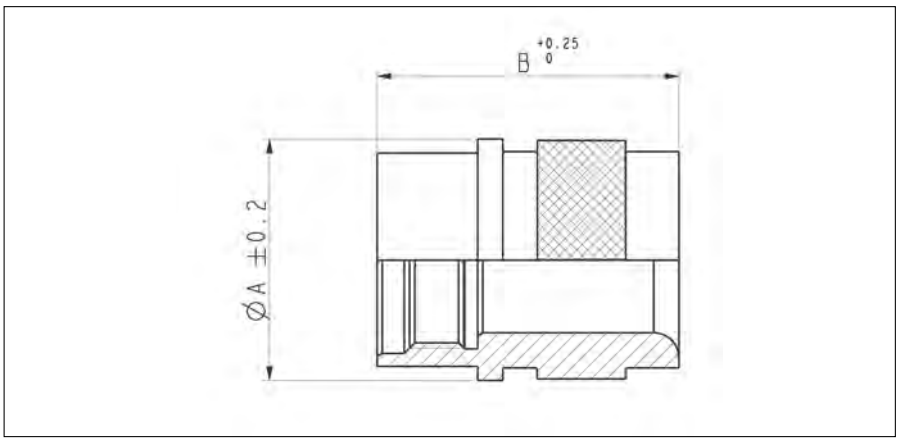

Part number	Shell size	Ø A$^{\pm 0.2}$	B
UT010AD	**10**	21	24.7
UT012AD	**12**	24	
UT014AD	**14**	27	
UT016AD	**16**	30	27
UT018AD	**18**	33.3	
UT020AD	**20**	36.5	
UT022AD	**22**	39.7	
UT024AD	**24**	42.9	

For threading specifications see last page of this section “Circular accessories”

Environmental dustcap for plugs (UTG6--DCG)

Suitable for UTP-UTG-UT0-UT0W

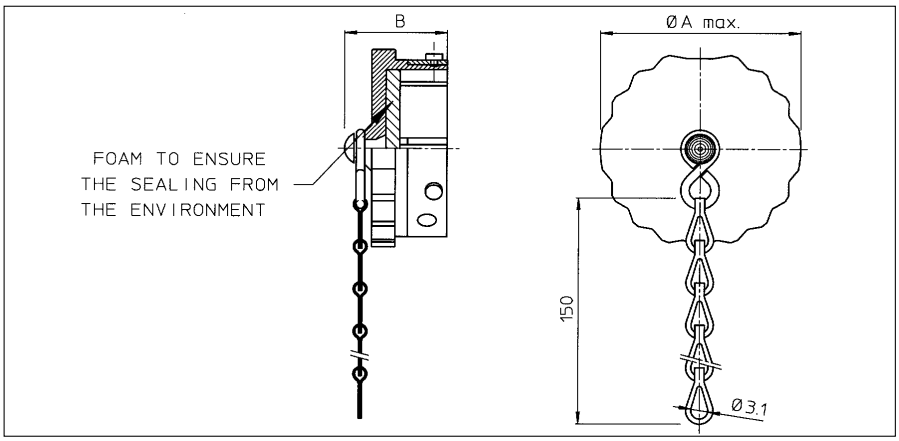

Part number	Shell size	A max.	B
UTG610DCG	**10**	20.0	20.8
UTG612DCG	**12**	24.0	
UTG614DCG	**14**	27.5	
UTG616DCG	**16**	30.5	
UTG618DCG	**18**	33.5	
UTG620DCG	**20**	36.5	22.5
UTG622DCG	**22**	40.0	
UTG624DCG	**24**	43.0	

For dustcap without chain skip “G” e.g. UTG612DC

Metal environmental dustcap for receptacles (UT0--DCG)

Suitable for UTP-UTG-UT0-UT0W

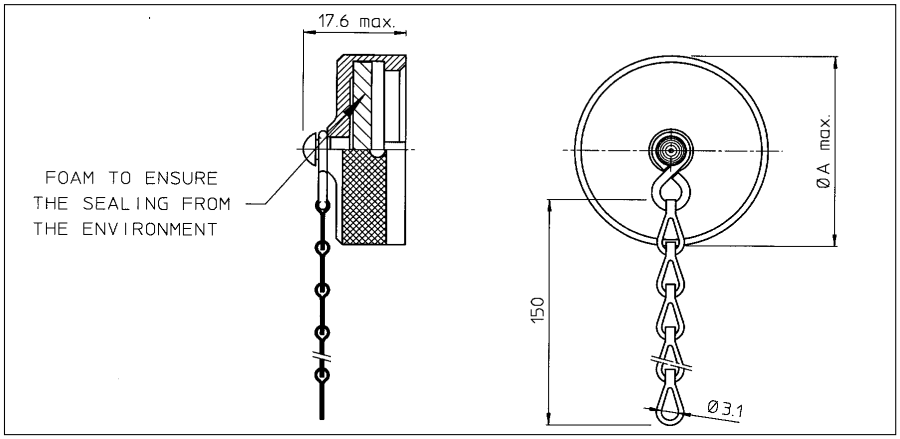

Part number	Shell size	A max.
UT010DCG	**10**	20.8
UT012DCG	**12**	24.9
UT014DCG	**14**	28.1
UT016DCG	**16**	31.3
UT018DCG	**18**	34.4
UT020DCG	**20**	37.6
UT022DCG	**22**	40.8
UT024DCG	**24**	43.9

For dustcap without chain skip “G” e.g. UTG 12DC
For jam dustcap consult factory

Plastic environmental dustcap for receptacles (UTP--DCG)

Suitable for UTP-UTG-UT0-UT0W

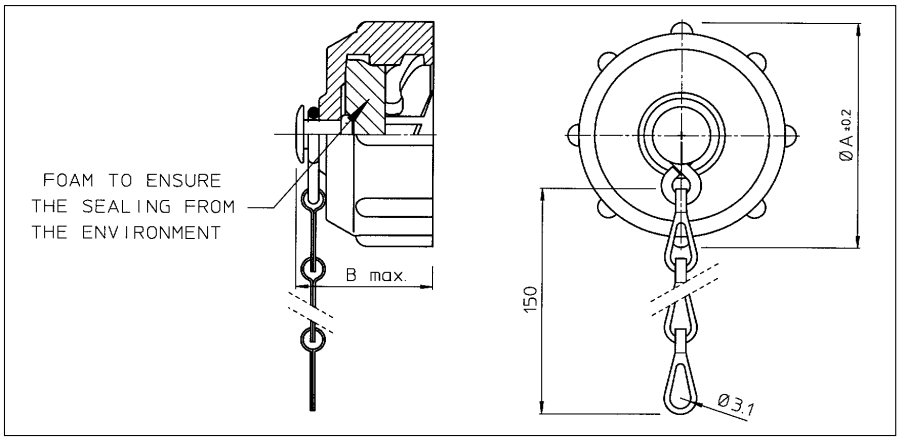

Part number	Shell size	Ø A ±0.2	B max.
UTP10DCG	**10**	26.7	19.3
UTP12DCG	**12**	31.4	20.0
UTP14DCG	**14**	34.5	20.2
UTP16DCG	**16**	37.8	
UTP18DCG	**18**	40.8	
UTP20DCG	**20**	43.9	21.8
UTP22DCG	**22**	47.0	
UTP24DCG	**24**	50.1	

For dustcap without chain skip “G” e.g. UTP 12DC
For jam dustcap consult factory

Sealing for wall mounting receptacle (UTFD1-B)

Suitable for UTP-UTG-UT0-UT0W

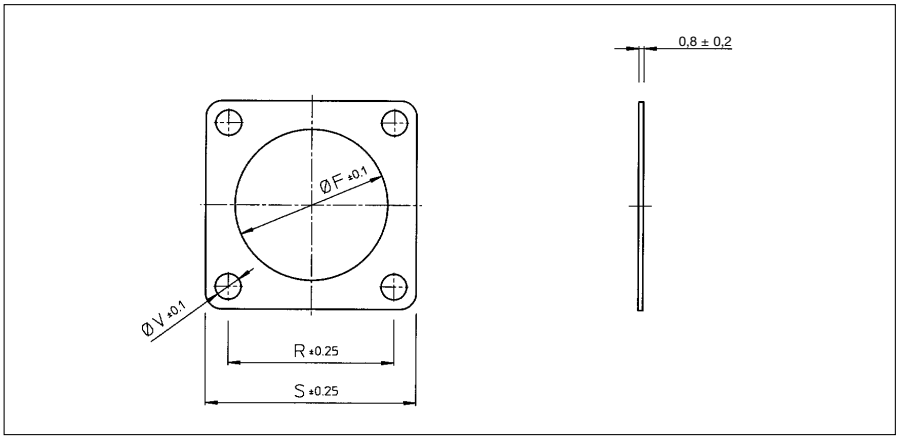

Part number	Shell size	Ø F ±0.1	R ±0.25	S ±0.25	Ø V
UTFD12B	10	15.9	18.3	23.8	
UTFD13B	12	19.0	20.6	26.2	
UTFD14B	14	22.2	23.0	28.6	
UTFD15B	16	25.4	24.6	31.0	3.3
UTFD16B	18	28.6	27.0	33.3	
UTFD17B	20	31.8	29.4	36.5	
UTFD18B	22	34.9	31.8	39.7	
UTFD19B	24	38.1	34.9	42.9	4.0

Adaptors for flexible cable protection systems (conduits)

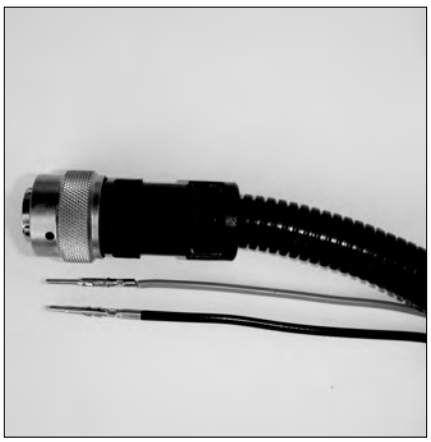

Adaptors for flexible cable protections systems that fit to the TRIM TRIO circular connectors are available from cable protection systems manufacturers (e.g. PMA).
2 solutions are offered:

- UNEF Adaptors that fit directly onto the connectors (left picture)
- METRIC Adaptors that fit onto the metal cable clamp tubes as indicated on pages 43 and 44 (right picture)

These types of adaptors offer extra protection to single wire applications (electrical, coax, Fibre optic … etc.)

Note: the adaptors are not available from Souriau. They must be ordered directly from the manufacturers

Cable gland threadings used on cable clamps

Shell size	Thread size on connectors	PG threading	Metric threading
10	9/16 - 24 UNEF	PG9	M16 x 1.5
12	11/16 - 24 UNEF	PG11	M20 x 1.5
14	13/16 - 20 UNEF	PG13.5	M20 x 1.5
16	15/16 - 20 UNEF	PG16	M25 x 1.5
18	1-1/16 - 18 UNEF	PG16	M25 x 1.5
20	1-3/16 - 18 UNEF	PG21	M32 x 1.5
22	1-5/16 - 18 UNEF	PG21	M32 x 1.5
24	1-7/16 - 18 UNEF	PG29	M32 x 1.5