ø172×51 mm

San Ace 172

Only standard fans (without sensors) have acquired CSA certification.

Round type

General Specifications

- Material ····· Frame: Aluminum, Impeller: Plastic (Flammability: UL 94V-1)
- Expected life ····· See the table below. (L10 life: 90% survival rate for continuous operation in free air at 60˚C, rated voltage)
- Motor structure ····· Capacitor motor
- Motor protection function ····· Locked rotor burnout protection, Reverse polarity protection
  For details, please refer to p. 547.
- Dielectric strength ····· 50/60 Hz, 1500 VAC, for 1 minute (between input terminal and frame)
- Dielectric strength (with sensor) ····· 50/60 Hz 1500 VAC 1 minute (between AC input terminal and frame)
  50/60 Hz 1000 VAC 1 minute (between lead wire conductors and frame)
- Insulation resistance ····· 10 MΩ or more with a 500 VDC megger
- Sound pressure level (SPL) ····· At 1 m away from the air inlet
- Operating voltage range ····· Voltage of each model ±10%
- Storage temperature ····· -30 to +70˚C (Non-condensing)
- Sensor-Purpose lead wire ····· ⊕Brown ⊖Black (Sensor) Yellow
- Mass ····· 1000 g

Specifications

Standard

Model no.	Rated voltage [V]	Frequency [Hz]	Input [W]	Current [A]	Locked rotor current [A]	Rated speed [min⁻¹]	Max. airflow [m³/min]	Max. airflow [CFM]	Max. static pressure [Pa]	Max. static pressure [inchH₂O]	SPL [dB (A)]	Operating temperature [˚C]	Expected life [h]
109-311	100	50/60	27/25	0.33/0.25	0.65/0.64	2900/3500	5.3/6.4	187.3/226.1	147/196	0.59/0.787	47/51	-30 to +60	25000/60˚C
109-314	115			0.29/0.22	0.55/0.54								
109-312	200			0.16/0.13	0.33/0.32								
109-313	230			0.14/0.11	0.28/0.27								

with Sensor

For sensor specifications, please refer to p. 550. Sensor specification differs depending on the fan's speed specification.
For a 5 V sensor power supply (ITEM-20), please append "-20" to the end of model number. E.g. 109-371-20
For a 12 V sensor power supply (ITEM-30), please append "-30" to the end of model number. E.g. 109-371-30

Model no.	Rated voltage [V]	Frequency [Hz]	Input [W]	Current [A]	Locked rotor current [A]	Rated speed [min⁻¹]	Max. airflow [m³/min]	Max. airflow [CFM]	Max. static pressure [Pa]	Max. static pressure [inchH₂O]	SPL [dB (A)]	Operating temperature [˚C]	Expected life [h]
109-371	100	50/60	27/25	0.33/0.25	0.65/0.64	2900/3500	5.3/6.4	187.3/226.1	147/196	0.59/0.787	47/51	-10 to +60	25000/60˚C
109-374	115			0.29/0.22	0.55/0.54								
109-372	200			0.16/0.13	0.33/0.32								
109-373	230			0.14/0.11	0.28/0.27								

Set Models

Fan, finger guard, plug cord, screws, etc. can be purchased in one package. For details, please refer to p. 594.

Order no.	Set items					
	Fan	Voltage	Low-speed sensor	Plug cord*	Finger guards	Mounting screws
ST1-109-311	109-311	100 V		489-1619-L10	109-319E	M4×25 mm (4 screws)
ST1-109-314	109-314	115 V		489-1619-L10	109-319E	
ST1-109-312	109-312	200 V		489-1619-L10	109-319E	
ST1-109-313	109-313	230 V		489-1619-L10	109-319E	
ST1-109-371-20	109-371-20	100 V	◯ (5 V)	489-1619-L10	109-319E	
ST1-109-371-30	109-371-30		◯ (12 V)	489-1619-L10	109-319E	
ST1-109-374-20	109-374-20	115 V	◯ (5 V)	489-1619-L10	109-319E	
ST1-109-374-30	109-374-30		◯ (12 V)	489-1619-L10	109-319E	
ST1-109-372-20	109-372-20	200 V	◯ (5 V)	489-1619-L10	109-319E	
ST1-109-372-30	109-372-30		◯ (12 V)	489-1619-L10	109-319E	
ST1-109-373-20	109-373-20	230 V	◯ (5 V)	489-1619-L10	109-319E	
ST1-109-373-30	109-373-30		◯ (12 V)	489-1619-L10	109-319E	

* PSE compatible.

Airflow - Static Pressure Characteristics

Standard

109-311, 109-314, 109-312, 109-313

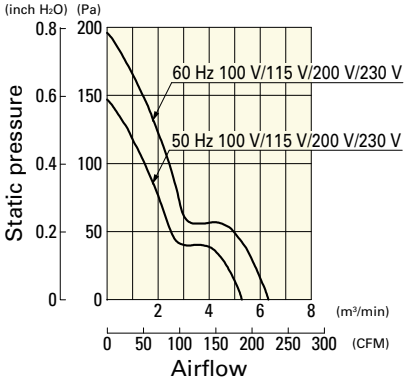

with Sensor

109-371, 109-374, 109-372, 109-373

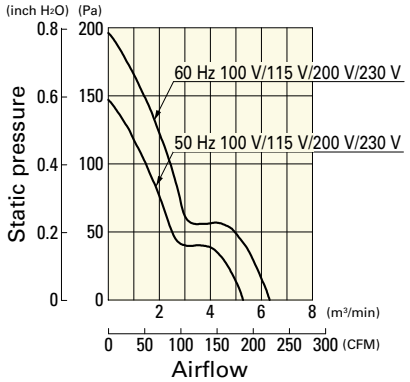

Dimensions (unit: mm)

Standard

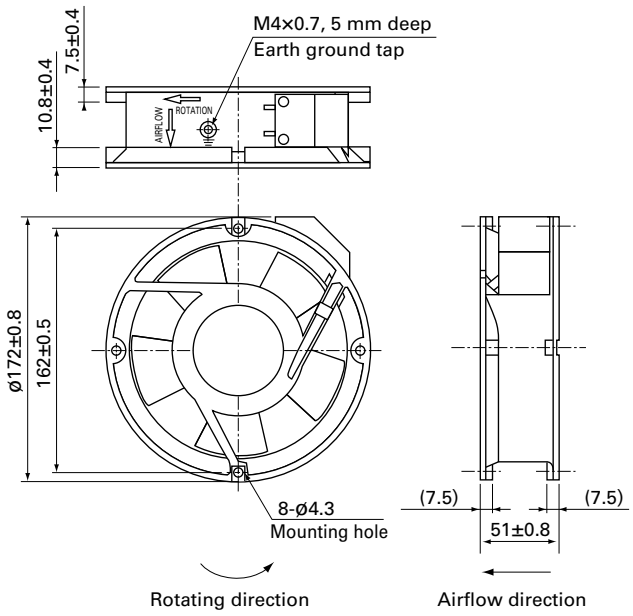

with Sensor

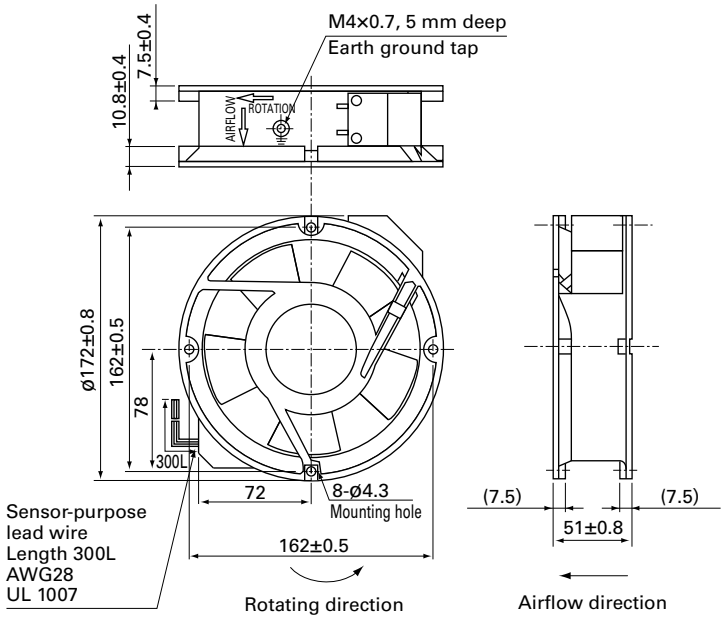

Reference Dimensions of Mounting Holes and Vent Opening (unit: mm)

Inlet side, Outlet side

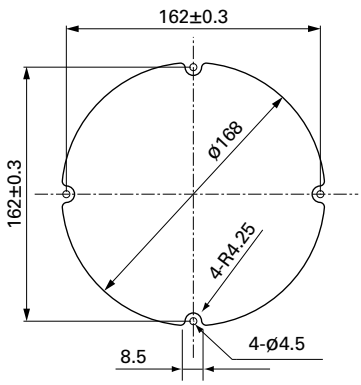

Wiring Diagram

Standard

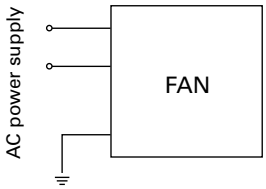

with Sensor

For fan power supply

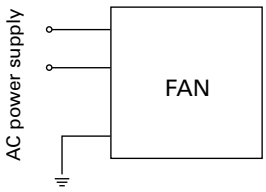

For sensor circuit
5 V (ITEM-20)

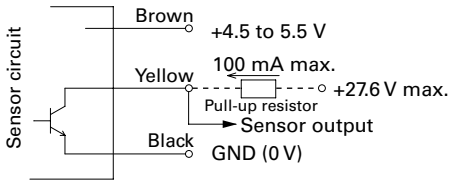

12 V (ITEM-30)

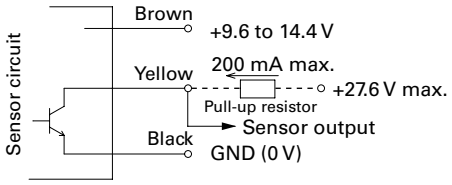

GND (Black) should be shared in case that power supply for sensor circuit (Brown) and that for sensor pull-up (Yellow) are separated.

Options

Finger guards

page: p. 534

Model no.: 109-319E, 109-319H, 109-320, 109-1066, 109-1068

Plug cord

page: pp. 542 to 543

Model no.: 489-1619-L10, 489-1619-L21, 489-084-L10, 489-084-L21