Altech Corp.® by BERNSTEIN

C2 Series

W

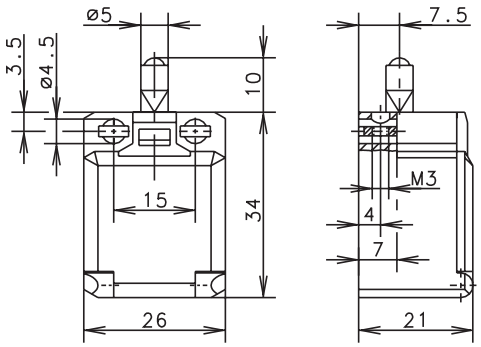

ST

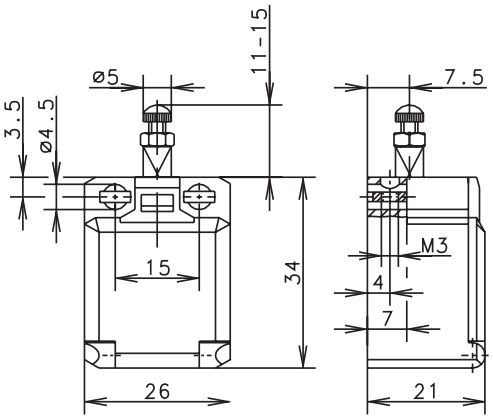

Switching Operation	W Slow Action	W Snap Action	ST Slow Action	ST Snap Action
1 NC / 1 NO Contacts	**600.8101.001** C2-U1Z 11 12 23 24	**600.8351.002** C2-SU1Z 13 14 21 22	**600.8104.025** C2-U1Z ST 11 12 23 24	**600.8354.026** C2-SU1Z ST 13 14 21 22
2 NC Contacts	**600.8801.003** C2-A2Z 11 12 21 22	**600.8851.004** C2-SA2Z 11 12 21 22	**600.8804.027** C2-A2Z ST 11 12 21 22	- -
2 NO Contacts	**600.8801.005** C2-E2 13 14 23 24	**600.8851.006** C2-SE2 13 14 23 24	**600.8804.029** C2-E2 ST 13 14 23 24	**600.8854.030** C2-SE2 ST 13 14 23 24
1 NC / 1 NO Contacts Overlapping	– -	– -	– -	– -

Technical Information	W Slow Action	W Snap Action	ST Slow Action	ST Snap Action
Maximum Switching Voltage	240V	240V	240V	240V
Maximum Switching Amperage	10A	10A	10A	10A
B10d	6 Million	6 Million	6 Million	6 Million
Mechanical Service Life	3×10^6	3×10^6	3×10^6	3×10^6
Switching Frequency	≤ 100/min	≤ 100/min	≤ 100/min	≤ 100/min
Operating Temperature	–30 °C to +80 °C	–30 °C to +80 °C	–30 °C to +80 °C	–30 °C to +80 °C
Protection Rating	IP20	IP20	IP20	IP20
Utilization Category	AC-15, Ue/Ue 240V 3A	AC-15, Ue/Ue 240V 3A	AC-15, Ue/Ue 240V 3A	AC-15, Ue/Ue 240V 3A
Rate Insulation Voltage	240VAC	240VAC	240VAC	240VAC
Approvals	UL CSA		UL CSA	

Special features / variants

- Actuator length adjustable with threaded screw

Drawing dimensions in mm

Altech Corp.® • 35 Royal Road • Flemington, NJ 08822-6000 • P (908)806-9400 • F (908)806-9490 • www.altechcorp.com