LTC2654: Quad 16-Bit/12-Bit Rail-To-Rail SPI DACs with 10ppm/°C Max Reference

DESCRIPTION

Demonstration circuit 1678A features the LTC2654 Quad 16-bit/12-bit DAC. The LTC2654 is a family of 16-bit/12-bit rail-to-rail DACs with integrated 10ppm/°C maximum reference. The LTC2654 advances performance standards for output drive, crosstalk and load regulation in single supply, voltage-output multiple DACs.

Design files for this circuit board are available at http://www.linear.com/demo

LT, LTC, LTM, µModule, Linear Technology and the Linear logo are registered trademarks of Linear Technology Corporation. All other trademarks are the property of their respective owners.

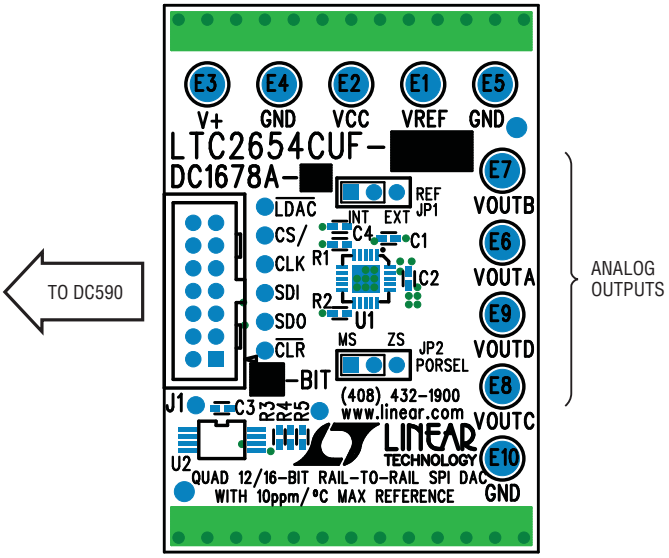

Figure 1. Connection Diagram

Table 1. LTC2654 Demo board variations

DEMO BOARD TYPE	LTC2654 VARIATION	FULL-SCALE VOLTAGE
DC1678A-A	LTC2654CUF-L16	2.5V
DC1678A-B	LTC2654CUF-H16	4.096V
DC1678A-C	LTC2654CUF-L12	2.5V
DC1678A-D	LTC2654CUF-H12	4.096V

QUICK START PROCEDURE

Connect the DC1678A to a DC590 USB serial controller using the supplied 14 conductor ribbon cable. Connect the DC590 to a host PC with a standard USB A/B cable. Run the QuikEval evaluation software supplied with the DC590 or download it from www.linear.com. The correct control panel will be loaded automatically. To update DAC value, fill in corresponding text box.

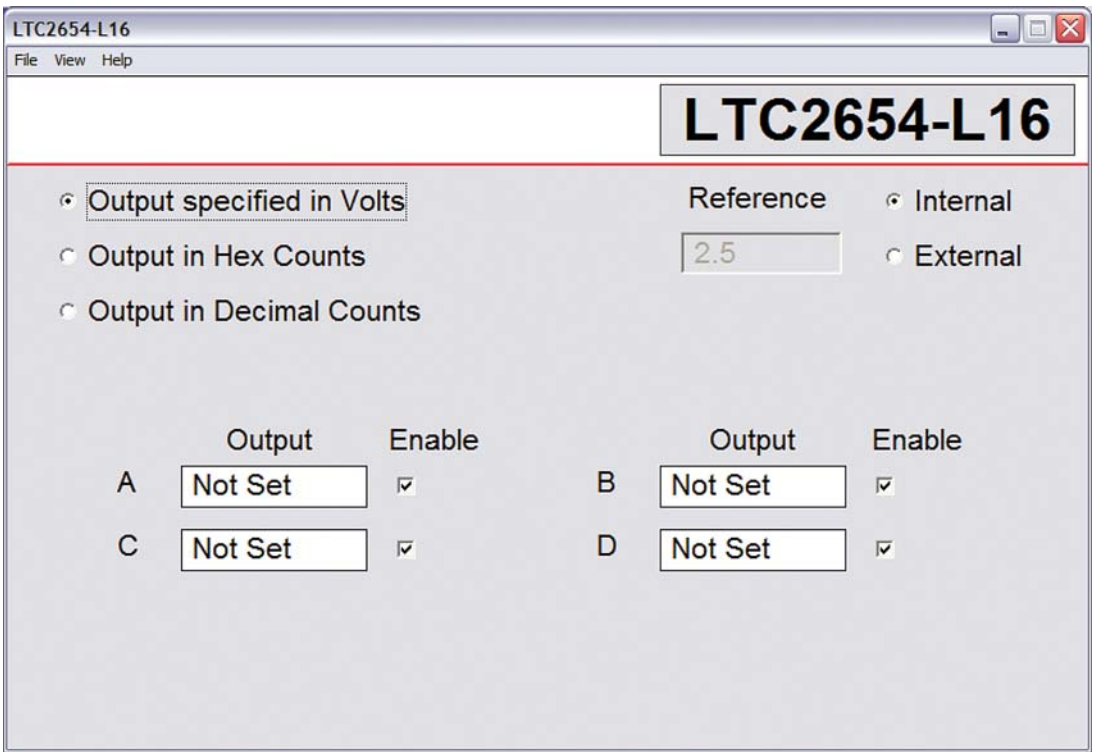

Figure 1. Demo Board Setup

QUICK START PROCEDURE

HARDWARE SET-UP

Jumpers

REF – V_{REF} Select. This jumper selects which mode the LTC2654 powers up in: External reference (EXT) or Internal reference (INT).

PORSEL – Power Up Mode. The LTC2654 can be set to either power up in Mid Scale or Zero Scale.

Analog Connections

DAC outputs – The 4 DAC outputs from the LTC2654 are brought out to turrets labeled VOUTA through VOUTD. These may be connected to external instruments or other circuitry.

NOTE: DAC outputs are not in alphabetical order on the circuit board.

V_{REF} – The V_{REF} turret is connected directly to the reference terminals of the LTC2654. The on-chip reference may be turned off, allowing the DAC reference pin to be driven from this turret. Alternatively, when the on-chip reference is on and active, the voltage can be monitored at this turret.

V^+ – Unregulated 10V is present here when a DC590 is connected. This turret is provided for monitoring purposes only and should not be connected to any other turrets on the board.

Grounding and Power Connections

Power (V_{CC}) – Normally the DC1678A is powered by the DC590 controller. V_{CC} can be supplied to this turret, however the power supply on DC590 must be disabled. Refer to DC590 Quick Start Guide for more details on this mode of operation.

Grounding – There are 3 ground turrets provided (labeled GND), as well as ground strips on the top and the bottom of the board.

PARTS LIST

ITEM	QTY	REFERENCE	PART DESCRIPTION	MANUFACTURER/PART NUMBER
Required Circuit Components				
1	3	C1,C2,C3	Capacitor, X7R, 0.1µF 16V, 0402	TDK, C1005X7R1C104K
2	1	C4	Capacitor, X7R, 0.047µF 16V, 0402	TDK, C1005X7R1C473K
3	10	E1-E10	TP, Turret, 0.064"	Mill-Max, 2308-2-00-80-00-00-07-0
4	2	JP1,JP2	Jumper, 3-Pin 1 Row 0.079CC	Samtec, TMM-103-02-L-S
5	1	J1	Header, 2X7 Pin, 0.079CC	Molex, 87831-1420
6	5	R1,R2,R3,R4,R5	Resistor, Chip 4.99k 1/16W 1%, 0402	NIC, NRC04F4991TRF
7	1	U2	IC, Serial EEPROM, TSSOP8	Microchip, 24LC025-I /ST
8	2	Shunts as Shown on Assy Dwg	Shunt, 0.079" Center	Samtec, 2SN-BK-G
		U1-A	IC, LTC2654CUF-L16, QFN20UF 4mm × 4mm	Linear Technology, LTC2654CUF-L16
		U1-B	IC, LTC2654CUF-H16, QFN20UF 4mm × 4mm	Linear Technology, LTC2654CUF-H16
		U1-C	IC, LTC2654CUF-L12, QFN20UF 4mm × 4mm	Linear Technology, LTC2654CUF-L12
		U1-D	IC, LTC2654CUF-H12, QFN20UF 4mm × 4mm	Linear Technology, LTC2654CUF-H12

SCHEMATIC DIAGRAM

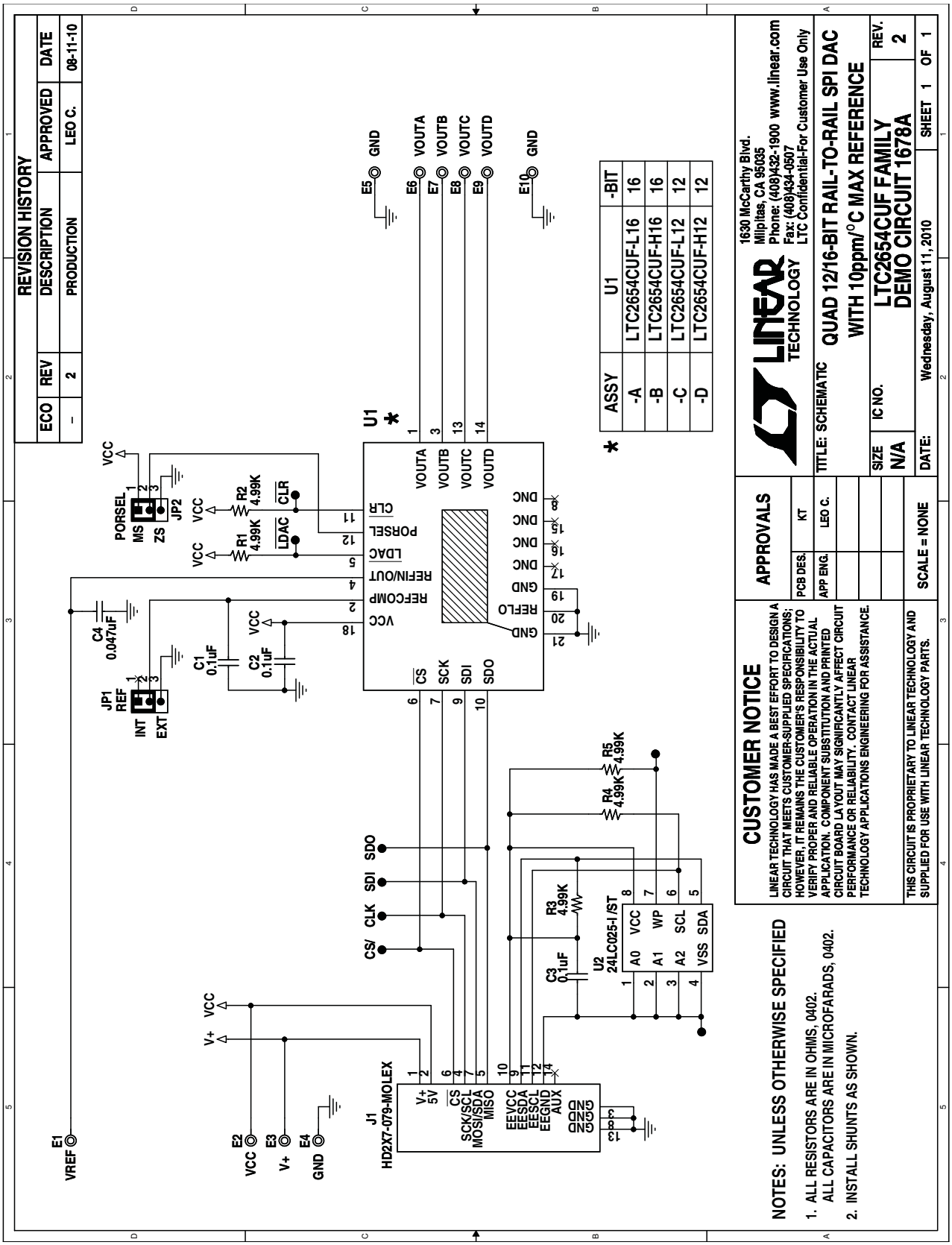

dc1678af

Information furnished by Linear Technology Corporation is believed to be accurate and reliable. However, no responsibility is assumed for its use. Linear Technology Corporation makes no representation that the interconnection of its circuits as described herein will not infringe on existing patent rights.

DEMONSTRATION BOARD IMPORTANT NOTICE

Linear Technology Corporation (LTC) provides the enclosed product(s) under the following **AS IS** conditions:

This demonstration board (DEMO BOARD) kit being sold or provided by Linear Technology is intended for use for **ENGINEERING DEVELOPMENT OR EVALUATION PURPOSES ONLY** and is not provided by LTC for commercial use. As such, the DEMO BOARD herein may not be complete in terms of required design-, marketing-, and/or manufacturing-related protective considerations, including but not limited to product safety measures typically found in finished commercial goods. As a prototype, this product does not fall within the scope of the European Union directive on electromagnetic compatibility and therefore may or may not meet the technical requirements of the directive, or other regulations.

If this evaluation kit does not meet the specifications recited in the DEMO BOARD manual the kit may be returned within 30 days from the date of delivery for a full refund. THE FOREGOING WARRANTY IS THE EXCLUSIVE WARRANTY MADE BY THE SELLER TO BUYER AND IS IN LIEU OF ALL OTHER WARRANTIES, EXPRESSED, IMPLIED, OR STATUTORY, INCLUDING ANY WARRANTY OF MERCHANTABILITY OR FITNESS FOR ANY PARTICULAR PURPOSE. EXCEPT TO THE EXTENT OF THIS INDEMNITY, NEITHER PARTY SHALL BE LIABLE TO THE OTHER FOR ANY INDIRECT, SPECIAL, INCIDENTAL, OR CONSEQUENTIAL DAMAGES.

The user assumes all responsibility and liability for proper and safe handling of the goods. Further, the user releases LTC from all claims arising from the handling or use of the goods. Due to the open construction of the product, it is the user's responsibility to take any and all appropriate precautions with regard to electrostatic discharge. Also be aware that the products herein may not be regulatory compliant or agency certified (FCC, UL, CE, etc.).

No License is granted under any patent right or other intellectual property whatsoever. **LTC assumes no liability for applications assistance, customer product design, software performance, or infringement of patents or any other intellectual property rights of any kind.**

LTC currently services a variety of customers for products around the world, and therefore this transaction **is not exclusive**.

Please read the DEMO BOARD manual prior to handling the product. Persons handling this product must have electronics training and observe good laboratory practice standards. **Common sense is encouraged**.

This notice contains important safety information about temperatures and voltages. For further safety concerns, please contact a LTC application engineer.

Mailing Address:

Linear Technology

1630 McCarthy Blvd.

Milpitas, CA 95035

Copyright © 2004, Linear Technology Corporation

Linear Technology Corporation
1630 McCarthy Blvd., Milpitas, CA 95035-7417
(408) 432-1900 • FAX: (408) 434-0507 • www.linear.com

LT 0211 • PRINTED IN USA

© LINEAR TECHNOLOGY CORPORATION 2011