Pt Temperature Sensor – PTF Family

- **Conformal to standard platinum temperature sensors according DIN EN 60751**
- **R_0: 100 and 1000 Ω**
- **Class F 0.1 (T = AA), F 0.15 (A), F 0.3 (B) and F 0.6 (C) accuracy**
- **Wide temperature range**
- **Different outline dimensions**
- **Global interchangeability**

DESCRIPTION

The PTF-sensor family combines a group of resistance temperature detectors (RTD) using a Platinum resistor in thin film technology as sensing element. It consists of a structured platinum film on a ceramics substrate, passivated by glass coating. The connection wires are protected with glass on the welding area.
The characteristic curve of this Platinum RTD complies with DIN EN 60751. The usage of Platinum as resistive material guarantees high long term stability.
Due to small outline and low mass this RTD has a low time constant; therefore it is a suitable solution for fast and precise feedback control systems.

FEATURES

Conformal to DIN EN 60751
Wide temperature range: -50 … +600 °C (Ni/Au wire and Class F 0.3, Ag-Wire versions are limited to 300 °C)
Standard nominal resistances values:
R_0: 100 and 1000 Ω (other on request)
Class F 0.1 (T = AA), F 0.15 (A), F 0.3 (B) and F 0.6 (C) accuracy
Low drift over lifetime
Fast response time because of low thermal mass
Different outline dimensions available to fit a wide range of space requirements
Global interchangeability

APPLICATIONS

Temperature feedback control
White goods
Industrial applications
Automotive
Medical
Sensing element for plug-in probes

Pt Temperature Sensor – PTF Family

PERFORMANCE SPECS

Parameter	Symbol	Condition	Min.	Typical	Max.	Unit
Nominal Resistance at 0 °C	R_0	Class B	99.88 998,8	100.00 1000.0	100.12 1001,2	Ω
Tolerance at 25 °C	Class B	Room temperature calibration	-0.43	0	0.43	°C
Temperature Coefficient of Resistance	TCR	0 °C, 100 °C		3850		ppm/°C
Temperature Range			-50		600	°C
Self Heating Coefficient in air, flow: 1 m/s		PTFC outline PTFD outline PTFF outline PTFM outline		0.5 0.33 0.5 0.5		°C/mW
Response Time Water Flow: 0.4 m/s	$\tau_{W,0.9}$	PTFC outline PTFD outline PTFF outline PTFM outline		0.2 0.35 0.2 0.2		s
Response Time Air Flow: 1 m/s	$\tau_{A,0.9}$	PTFC outline PTFD outline PTFF outline PTFM outline		10 17 10 10		s
Measuring Current R_0: 100 Ω		PTFC outline PTFD outline PTFF outline PTFM outline			1.4 1.7 1.4 1.4	mA
Measuring Current R_0: 1000 Ω		PTFC outline PTFD outline PTFF outline PTFM outline			0.4 0.5 0.4 0.4	mA

CALCULATION FORMULAS

The calculation formulas of Pt-RTDs are defined in DIN EN 60751 as following:

For T ≥ 0 °C:

$$R(T) = R(0)*(1+a*T+b*T^2)$$

For T < 0 °C:

$$R(T) = R(0)*[1+a*T+b*T^2+c*(T-100°C)*T^3]$$

Coefficients:

a = 3.9083E-03
b = -5.775E-07
c = -4.183E-12

Tolerances:

Class F 0.1 (T = AA):	± (0.10+0.0017*|T/°C|) °C	(-30..+200 °C)
Class F 0.15 (A)	± (0.15+0.002*|T/°C|) °C	(-30..+300 °C)
Class F 0.3 (B):	± (0.30+0.005*|T/°C|) °C	(-50..+600 °C)
Class F 0.6 (C):	± (0.60+0.01*|T/°C|) °C	(-50..+600 °C)

TYPICAL PERFORMANCE CURVES

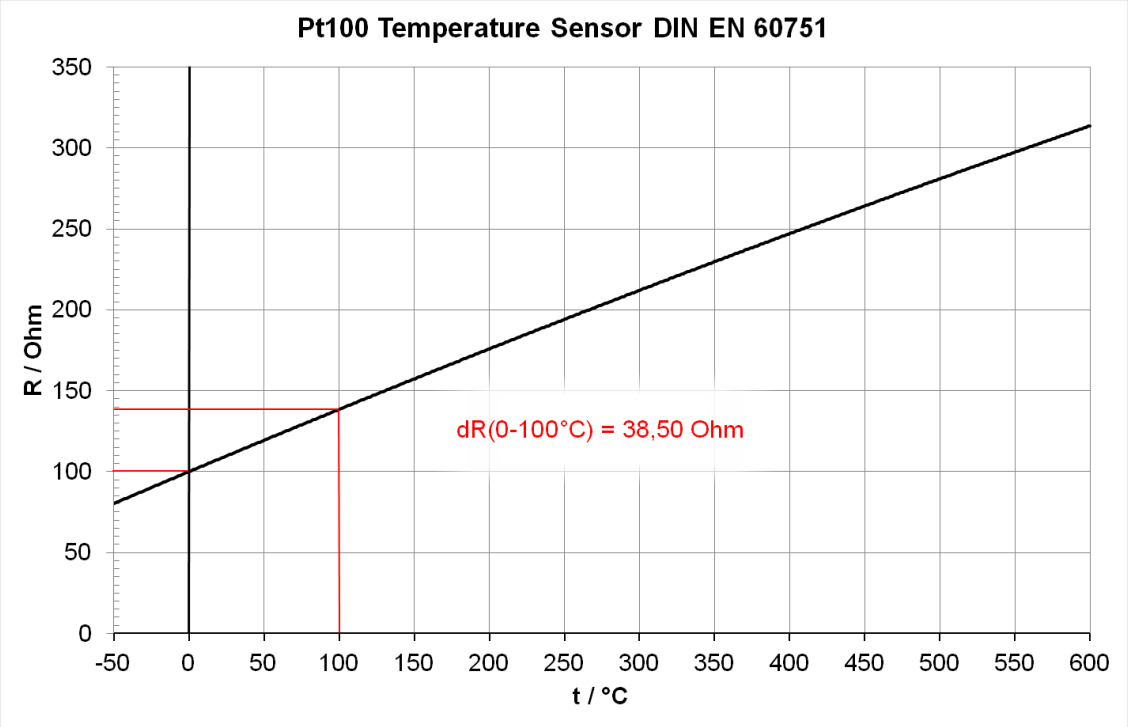

Figure 1: Resistance characteristics

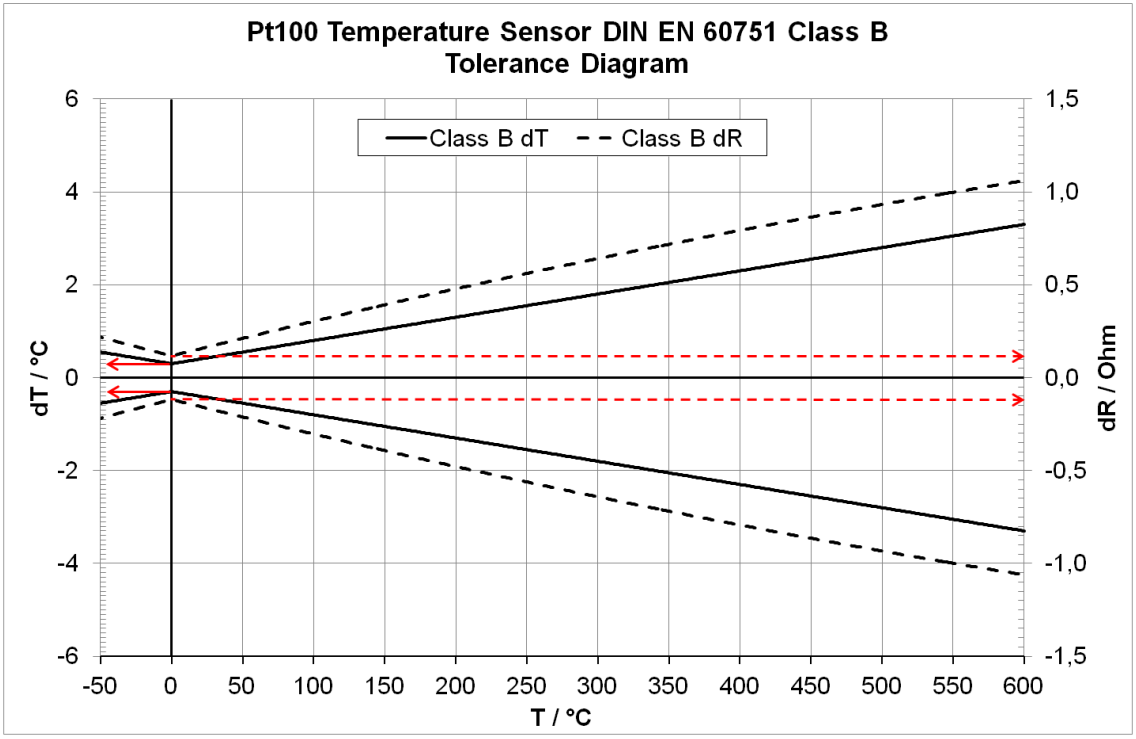

Figure 2: Tolerance chart

DIMENSIONAL DRAWING - PTFC OUTLINE

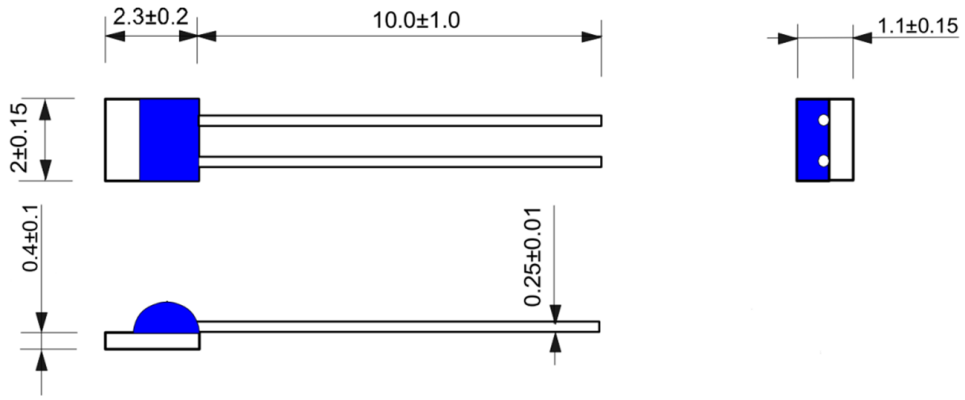

Figure 3: PTFC outline dimensions (mm)

DIMENSIONAL DRAWING - PTFD OUTLINE

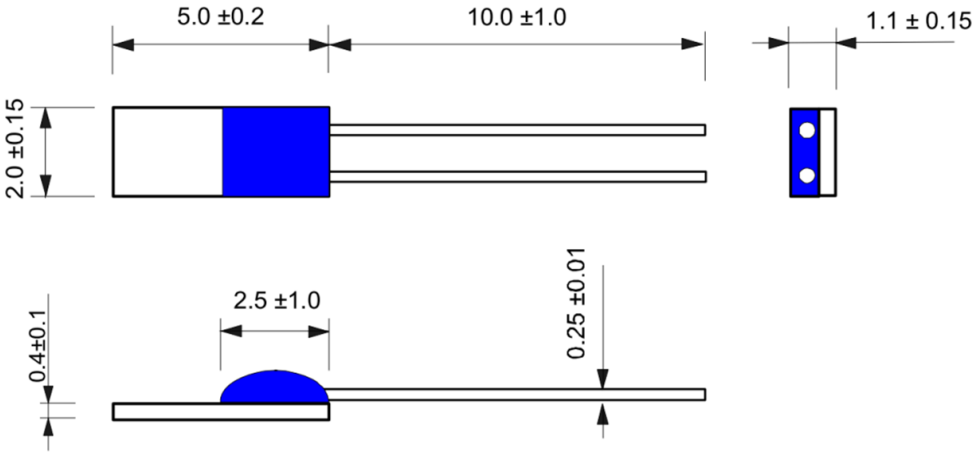

Figure 4: PTFD outline dimensions (mm)

DIMENSIONAL DRAWING - PTFF OUTLINE

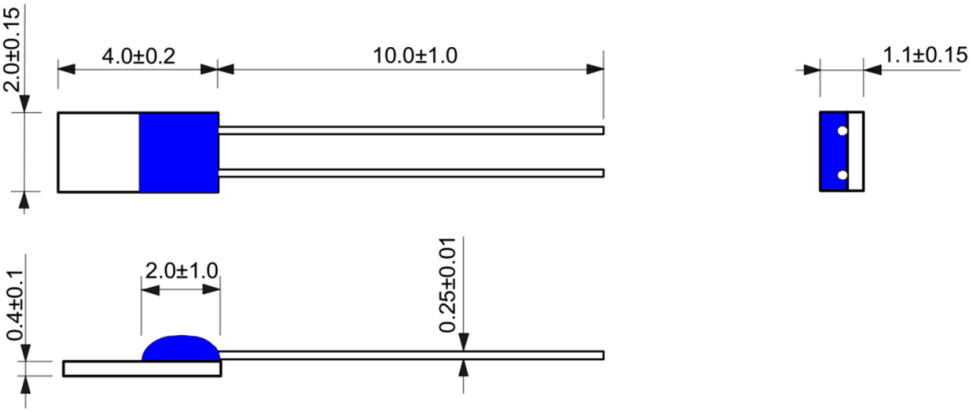

Figure 5: PTFF outline dimensions (mm)

Pt Temperature Sensor – PTF Family

DIMENSIONAL DRAWING - PTFM OUTLINE

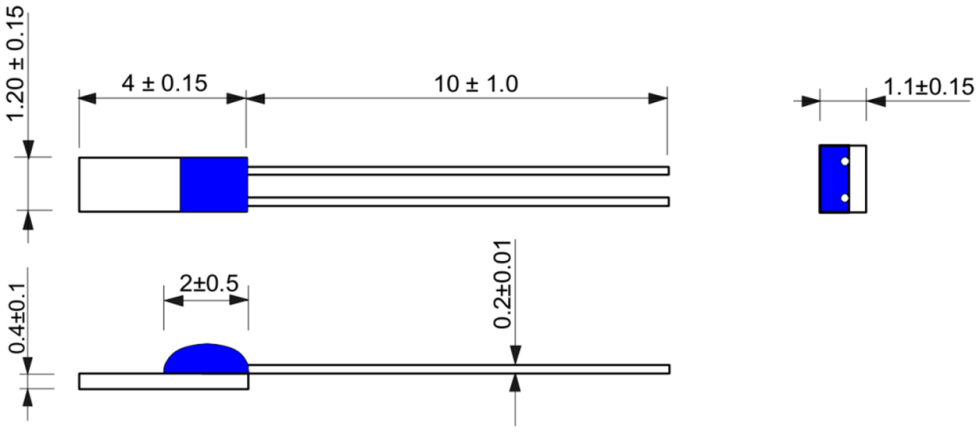

Figure 6: PTFM outline dimensions (mm)

TYPE CONFIGURATION MATRIX

Sensor family	Type	Outline dimensions	Nominal resistance		Tolerance class DIN EN 60751				Connection wire	
			100 Ω	1000 Ω					Ag wire	Ni/Au wire
PTF	C	2.0 x 2.3	101	102	T	A	B	C	1A0	1G0
PTF	D	2.0 x 5.0	101	102	T	A	B	C	1A0	1G0
PTF	F	2.0 x 4.0	101	102	T	A	B	C	1A0	1G0
PTF	M	1.2 x 4.0	101	102	T	A	B	C	1A0	1G0

Pt Temperature Sensor – PTF Family

ORDERING INFORMATION I

Product Number	Type	Description
Platinum Thin Film Sensors PTFC-Type (2 mm x 2.3 mm)		
G-PTCO-005	PTFC101C1G0	100 Ohms, 2.0 mm x 2.3 mm, F 0.6 (C), Ni/Au-wire
G-PTCO-002	PTFC101B1G0	100 Ohms, 2.0 mm x 2.3 mm, F 0.3 (B), Ni/Au-wire
G-PTCO-011	PTFC101A1G0	100 Ohms, 2.0 mm x 2.3 mm, F 0.15 (A), Ni/Au-wire
G-PTCO-058	PTFC101T1G0	100 Ohms, 2.0 mm x 2.3 mm, F 0.1 (T = AA), Ni/Au-wire
G-PTCO-159	PTFC101C1A0	100 Ohms, 2.0 mm x 2.3 mm, F 0.6 (C), Ag-wire
G-PTCO-160	PTFC101B1A0	100 Ohms, 2.0 mm x 2.3 mm, F 0.3 (B), Ag-wire
G-PTCO-161	PTFC101A1A0	100 Ohms, 2.0 mm x 2.3 mm, F 0.15 (A), Ag-wire
G-PTCO-162	PTFC101T1A0	100 Ohms, 2.0 mm x 2.3 mm, F 0.1 (T = AA), Ag-wire
G-PTCO-046	PTFC102C1G0	1000 Ohms, 2.0 mm x 2.3 mm, F 0.6 (C), Ni/Au-wire
G-PTCO-006	PTFC102B1G0	1000 Ohms, 2.0 mm x 2.3 mm, F 0.3 (B), Ni/Au-wire
G-PTCO-029	PTFC102A1G0	1000 Ohms, 2.0 mm x 2.3 mm, F 0.15 (A), Ni/Au-wire
G-PTCO-154	PTFC102T1G0	1000 Ohms, 2.0 mm x 2.3 mm, F 0.1 (T = AA), Ni/Au-wire
G-PTCO-163	PTFC102C1A0	1000 Ohms, 2.0 mm x 2.3 mm, F 0.6 (C), Ag-wire
G-PTCO-157	PTFC102B1A0	1000 Ohms, 2.0 mm x 2.3 mm, F 0.3 (B), Ag-wire
G-PTCO-164	PTFC102A1A0	1000 Ohms, 2.0 mm x 2.3 mm, F 0.15 (A), Ag-wire
G-PTCO-165	PTFC102T1A0	1000 Ohms, 2.0 mm x 2.3 mm, F 0.1 (T = AA), Ag-wire
Platinum Thin Film Sensors PTFD-Type (2 mm x 5 mm)		
G-PTCO-013	PTFD101C1G0	100 Ohms, 2.0 mm x 5.0 mm, F 0.6 (C), Ni/Au-wire
G-PTCO-024	PTFD101B1G0	100 Ohms, 2.0 mm x 5.0 mm, F 0.3 (B), Ni/Au-wire
G-PTCO-037	PTFD101A1G0	100 Ohms, 2.0 mm x 5.0 mm, F 0.15 (A), Ni/Au-wire
G-PTCO-155	PTFD101T1G0	100 Ohms, 2.0 mm x 5.0 mm, F 0.1 (T = AA), Ni/Au-wire
G-PTCO-166	PTFD101C1A0	100 Ohms, 2.0 mm x 5.0 mm, F 0.6 (C), Ag-wire
G-PTCO-053	PTFD101B1A0	100 Ohms, 2.0 mm x 5.0 mm, F 0.3 (B), Ag-wire
G-PTCO-158	PTFD101A1A0	100 Ohms, 2.0 mm x 5.0 mm, F 0.15 (A), Ag-wire
G-PTCO-152	PTFD101T1A0	100 Ohms, 2.0 mm x 5.0 mm, F 0.1 (T = AA), Ag-wire
G-PTCO-167	PTFD102C1G0	1000 Ohms, 2.0 mm x 5.0 mm, F 0.6 (C), Ni/Au-wire
G-PTCO-126	PTFD102B1G0	1000 Ohms, 2.0 mm x 5.0 mm, F 0.3 (B), Ni/Au-wire
G-PTCO-168	PTFD102A1G0	1000 Ohms, 2.0 mm x 5.0 mm, F 0.15 (A), Ni/Au-wire
G-PTCO-150	PTFD102T1G0	1000 Ohms, 2.0 mm x 5.0 mm, F 0.1 (T = AA), Ni/Au-wire
G-PTCO-169	PTFD102C1A0	1000 Ohms, 2.0 mm x 5.0 mm, F 0.6 (C), Ag-wire
G-PTCO-035	PTFD102B1A0	1000 Ohms, 2.0 mm x 5.0 mm, F 0.3 (B), Ag-wire
G-PTCO-170	PTFD102A1A0	1000 Ohms, 2.0 mm x 5.0 mm, F 0.15 (A), Ag-wire
G-PTCO-151	PTFD102T1A0	1000 Ohms, 2.0 mm x 5.0 mm, F 0.1 (T = AA), Ag-wire

Pt Temperature Sensor – PTF Family

ORDERING INFORMATION II

Product Number	Type	Description
Platinum Thin Film Sensors PTFF-Type (2 mm x 4 mm)		
G-PTCO-171	PTFF101C1G0	100 Ohms, 2.0 mm x 4.0 mm, F 0.6 (C), Ni/Au-wire
G-PTCO-172	PTFF101B1G0	100 Ohms, 2.0 mm x 4.0 mm, F 0.3 (B), Ni/Au-wire
G-PTCO-173	PTFF101A1G0	100 Ohms, 2.0 mm x 4.0 mm, F 0.15 (A), Ni/Au-wire
G-PTCO-174	PTFF101T1G0	100 Ohms, 2.0 mm x 4.0 mm, F 0.1 (T = AA), Ni/Au-wire
G-PTCO-175	PTFF101C1A0	100 Ohms, 2.0 mm x 4.0 mm, F 0.6 (C), Ag-wire
G-PTCO-176	PTFF101B1A0	100 Ohms, 2.0 mm x 4.0 mm, F 0.3 (B), Ag-wire
G-PTCO-177	PTFF101A1A0	100 Ohms, 2.0 mm x 4.0 mm, F 0.15 (A), Ag-wire
G-PTCO-178	PTFF101T1A0	100 Ohms, 2.0 mm x 4.0 mm, F 0.1 (T = AA), Ag-wire
G-PTCO-149	PTFF102C1G0	1000 Ohms, 2.0 mm x 4.0 mm, F 0.6 (C), Ni/Au-wire
G-PTCO-101	PTFF102B1G0	1000 Ohms, 2.0 mm x 4.0 mm, F 0.3 (B), Ni/Au-wire
G-PTCO-179	PTFF102A1G0	1000 Ohms, 2.0 mm x 4.0 mm, F 0.15 (A), Ni/Au-wire
G-PTCO-180	PTFF102T1G0	1000 Ohms, 2.0 mm x 4.0 mm, F 0.1 (T = AA), Ni/Au-wire
G-PTCO-181	PTFF102C1A0	1000 Ohms, 2.0 mm x 4.0 mm, F 0.6 (C), Ag-wire
G-PTCO-182	PTFF102B1A0	1000 Ohms, 2.0 mm x 4.0 mm, F 0.3 (B), Ag-wire
G-PTCO-183	PTFF102A1A0	1000 Ohms, 2.0 mm x 4.0 mm, F 0.15 (A), Ag-wire
G-PTCO-184	PTFF102T1A0	1000 Ohms, 2.0 mm x 4.0 mm, F 0.1 (T = AA), Ag-wire
Platinum Thin Film Sensors PTFM-Type (1.2 mm x 4 mm)		
G-PTCO-148	PTFM101C1G0	100 Ohms, 1.2 mm x 4.0 mm, F 0.6 (C), Ni/Au-wire
G-PTCO-032	PTFM101B1G0	100 Ohms, 1.2 mm x 4.0 mm, F 0.3 (B), Ni/Au-wire
G-PTCO-142	PTFM101A1G0	100 Ohms, 1.2 mm x 4.0 mm, F 0.15 (A), Ni/Au-wire
G-PTCO-156	PTFM101T1G0	100 Ohms, 1.2 mm x 4.0 mm, F 0.1 (T = AA), Ni/Au-wire
G-PTCO-185	PTFM101C1A0	100 Ohms, 1.2 mm x 4.0 mm, F 0.6 (C), Ag-wire
G-PTCO-186	PTFM101B1A0	100 Ohms, 1.2 mm x 4.0 mm, F 0.3 (B), Ag-wire
G-PTCO-187	PTFM101A1A0	100 Ohms, 1.2 mm x 4.0 mm, F 0.15 (A), Ag-wire
G-PTCO-188	PTFM101T1A0	100 Ohms, 1.2 mm x 4.0 mm, F 0.1 (T = AA), Ag-wire
G-PTCO-189	PTFM102C1G0	1000 Ohms, 1.2 mm x 4.0 mm, F 0.6 (C), Ni/Au-wire
G-PTCO-012	PTFM102B1G0	1000 Ohms, 1.2 mm x 4.0 mm, F 0.3 (B), Ni/Au-wire
G-PTCO-050	PTFM102A1G0	1000 Ohms, 1.2 mm x 4.0 mm, F 0.15 (A), Ni/Au-wire
G-PTCO-153	PTFM102T1G0	1000 Ohms, 1.2 mm x 4.0 mm, F 0.1 (T = AA), Ni/Au-wire
G-PTCO-190	PTFM102C1A0	1000 Ohms, 1.2 mm x 4.0 mm, F 0.6 (C), Ag-wire
G-PTCO-191	PTFM102B1A0	1000 Ohms, 1.2 mm x 4.0 mm, F 0.3 (B), Ag-wire
G-PTCO-192	PTFM102A1A0	1000 Ohms, 1.2 mm x 4.0 mm, F 0.15 (A), Ag-wire
G-PTCO-193	PTFM102T1A0	1000 Ohms, 1.2 mm x 4.0 mm, F 0.1 (T = AA), Ag-wire

TECHNICAL CONTACT INFORMATION

NORTH AMERICA	EUROPE	ASIA
Measurement Specialties, Inc. 910 Turnpike Road Shrewsbury, MA 01545 United States Phone: +1-508-842-0516 Fax: +1-508-842-0342 Email: temperature.sales.amer@meas-spec.com Web: www.meas-spec.com	MEAS Deutschland GmbH Hauert 13 D-44227 Dortmund Germany Phone: +49-(0)231-9740-0 Fax: +49-(0)231-9740-20 Email: info.de@meas-spec.com Web: www.meas-spec.com	Measurement Specialties China Ltd. No. 26, Langshan Road High-tech Park (North) Nanshan District, Shenzhen 518057 China Phone: +86-755-33305088 Fax: +86-755-33305099 Email: temperature.sales.asia@meas-spec.com Web: www.meas-spec.com

The information in this sheet has been carefully reviewed and is believed to be accurate; however, no responsibility is assumed for inaccuracies. Furthermore, this information does not convey to the purchaser of such devices any license under the patent rights to the manufacturer. Measurement Specialties, Inc. reserves the right to make changes without further notice to any product herein. Measurement Specialties, Inc. makes no warranty, representation or guarantee regarding the suitability of its product for any particular purpose, nor does Measurement Specialties, Inc. assume any liability arising out of the application or use of any product or circuit and specifically disclaims any and all liability, including without limitation consequential or incidental damages. Typical parameters can and do vary in different applications. All operating parameters must be validated for each customer application by customer's technical experts. Measurement Specialties, Inc. does not convey any license under its patent rights nor the rights of others.