CDBC320LR-HF Thru. CDBC3200LR-HF

Reverse Voltage: 20 to 200 Volts
Forward Current: 3.0 Amp
RoHS Device
Halogen Free

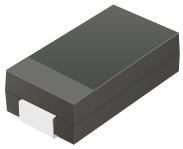

Features

- Low Profile surface mount applications in order to optimize board space.
- Low power loss, high efficiency.
- High current capability, low forward voltage drop.
- High surge capability.
- Guard ring for overvoltage protection.
- Ultra high-speed switching.
- Silicon epitaxial planar chip, metal silicon junction.

DO-214AB (SMC)

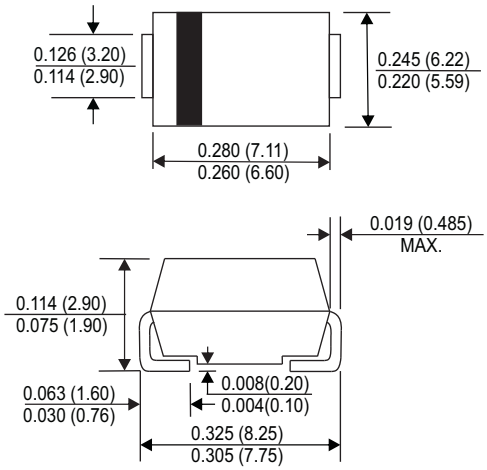

Dimensions in inches and (millimeter)

Mechanical data

- Epoxy: UL94-V0 rate flame retardant.
- Case: Molded plastic, DO-214AB / SMC
- Terminals: solderable per MIL-STD-750, method 2026.
- Polarity: Indicated by cathode band.
- Weight: 0.226 grams(Approx.)

Circuit Diagram

Maximum Ratings and Electrical Characteristics

Ratings at Ta=25°C unless otherwise noted.
Single phase, half wave, 60Hz, resistive or inductive loaded.
For capacitive load, derate current by 20% .

Parameter	Symbol	CDBC 320LR-HF	CDBC 340LR-HF	CDBC 360LR-HF	CDBC 3100LR-HF	CDBC 3150LR-HF	CDBC 3200LR-HF	Unit
Max. Repetitive peak reverse voltage	V_{RRM}	20	40	60	100	150	200	V
Max. DC blocking voltage	V_{DC}	20	40	60	100	150	200	V
Max. RMS voltage	V_{RMS}	14	28	42	70	105	140	V
Max. Instantaneous forward voltage @3.0A, T_A=25°C	V_F	0.40	0.45	0.55	0.75	0.82	0.85	V
Operating Temperature	T_J	-50 to +150				-50 to +175		°C

Parameter	Conditions	Symbol	MIN.	TYP.	MAX.	Unit
Forward rectified current	see Fig.1	I_O			3.0	A
Forward surge current	8.3ms single half sine-wave superimposed on rate load (JEDEC method)	I_{FSM}			125	A
Reverse Current	V_R =V_{RRM} T_A=25°C	I_R			0.5	mA
	V_R =V_{RRM} T_A=100°C	I_R			20	mA
Thermal Resistance	Junction to ambient	$R_{\theta JA}$		55		°C/W
Diode Junction capacitance	f=1MHz and applied 4V DC reverse Voltage	C_J		250		pF
Storage temperature		T_{STG}	-50		+175	°C

Company reserves the right to improve product design , functions and reliability without notice.

RATING AND CHARACTERISTIC CURVES (CDBC320LR-HF Thru. CDBC3200LR-HF)

Fig.1 - Typical Forward Current Derating Curve

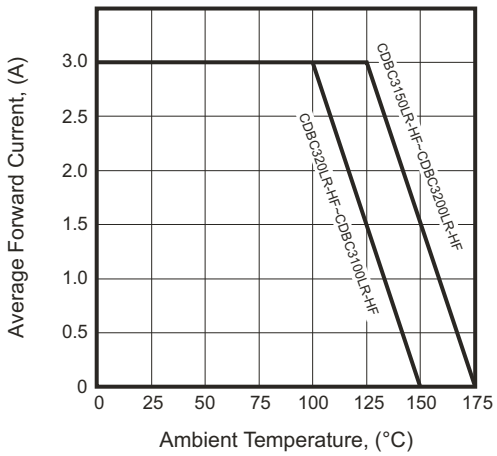

Fig.2 - Typical Forward Characteristics

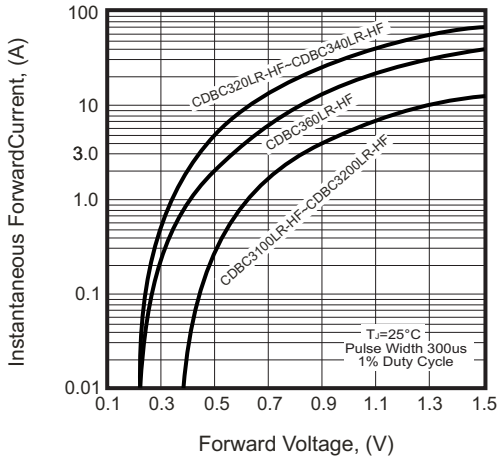

Fig.3 - Maximum Non-repetitive Forward Surge Current

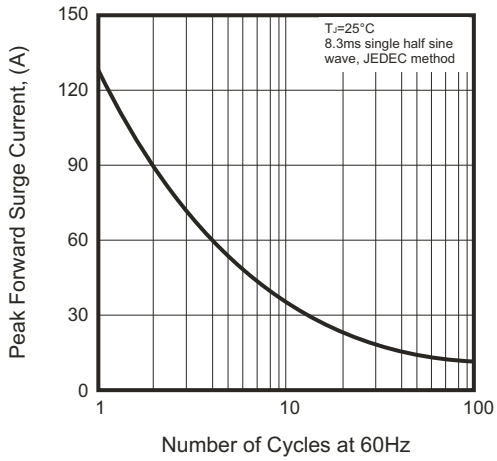

Fig.4 - Typical Junction Capacitance

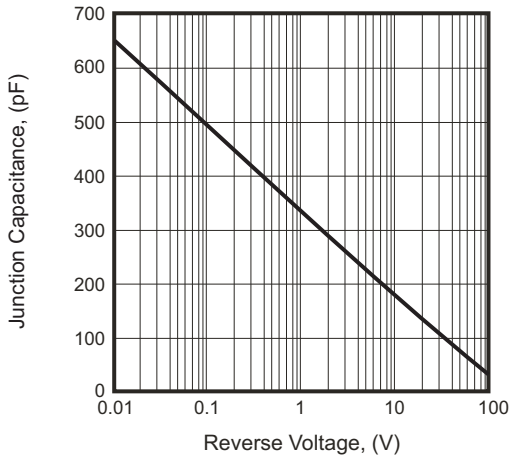

Fig.5 - Typical Reverse Characteristics

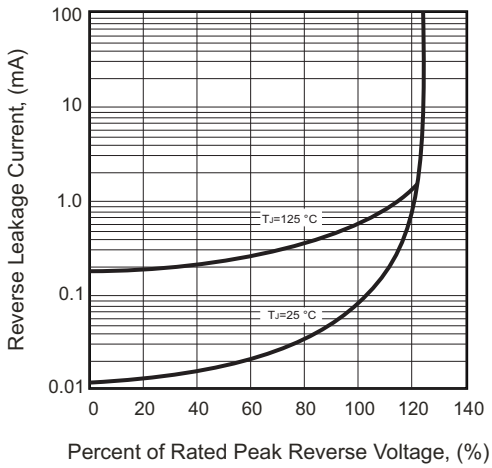

Company reserves the right to improve product design , functions and reliability without notice.

Reel Taping Specification

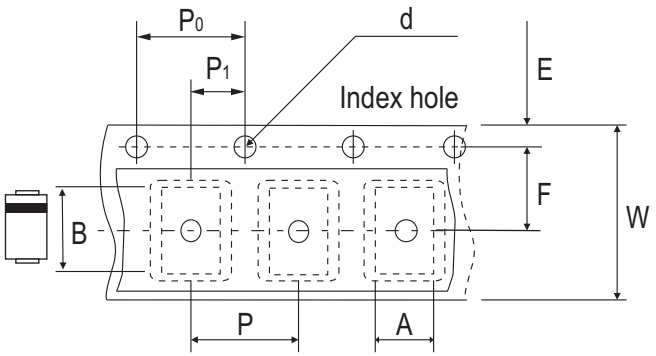

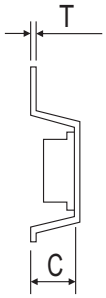

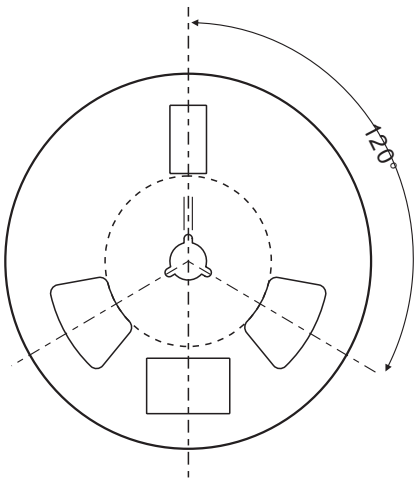

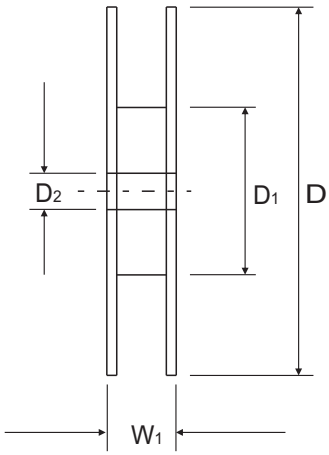

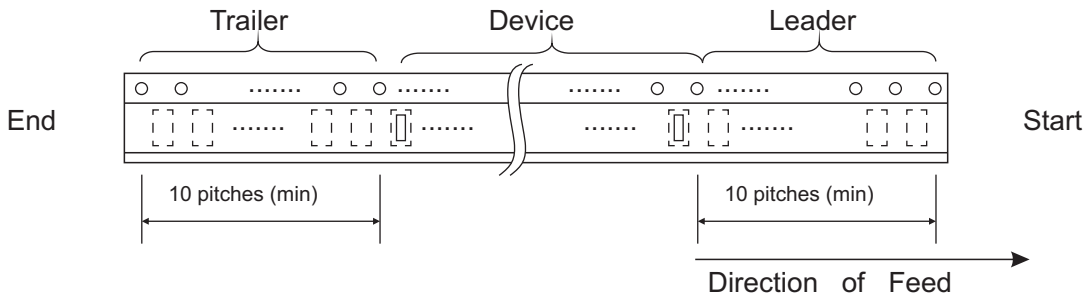

	SYMBOL	A	B	C	d	D	D1	D2
DO-214AB (SMC)	(mm)	6.30 ± 0.10	8.60 ± 0.10	2.90 ± 0.10	1.50 ± 0.10	330 ± 2.00	50.0 MIN.	13.50 ± 0.50
	(inch)	0.248 ± 0.004	0.339 ± 0.004	0.114 ± 0.004	0.059 ± 0.004	12.99 ± 0.079	1.969 MIN.	0.531 ± 0.020

	SYMBOL	E	F	P	P0	P1	T	W	W1
DO-214AB (SMC)	(mm)	1.75 ± 0.10	7.50 ± 0.10	8.00 ± 0.10	4.00 ± 0.10	2.00 ± 0.10	0.60 ± 0.10	16.00 ± 0.30	22.40 ± 1.00
	(inch)	0.069 ± 0.004	0.295 ± 0.004	0.315± 0.004	0.157 ± 0.004	0.079 ± 0.004	0.236 ± 0.004	0.630 ±0.012	0.882 ± 0.039

Company reserves the right to improve product design , functions and reliability without notice.

Marking Code

Part Number	Marking Code
CDBC320LR-HF	KL32
CDBC340LRHF	KL34
CDBC360LRHF	KL36
CDBC3100LRHF	KL310
CDBC3150LRHF	KL315
CDBC3200LRHF	KL320

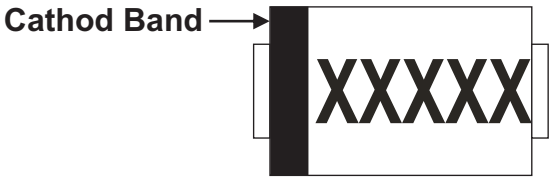

XXXXX = Product type marking code

Suggested PAD Layout

SIZE	DO-214AB (SMC)	
	(mm)	(inch)
A	6.90	0.272
B	2.50	0.098
C	3.30	0.130
D	9.40	0.370
E	4.40	0.173

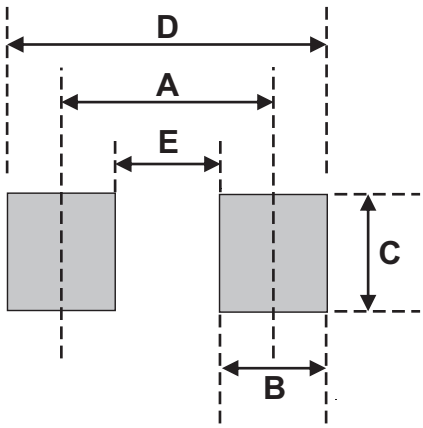

Standard Packaging

Case Type	REEL PACK	
	REEL (pcs)	Reel Size (inch)
DO-214AB (SMC)	3,000	13