Surge arrester

3-electrode arrester

Series/Type: **T23-A230XF4**
Ordering code: **B88069X8750B502**
Version/Date: Issue 09 / 2007-10-18

© EPCOS AG 2007. Reproduction, publication and dissemination of this document, enclosures hereto and the information contained therein without EPCOS' prior express consent is prohibited.

Features	Applications
▪ Standard size ▪ Fast response time ▪ High current rating ▪ Stable performance over life ▪ Very low capacitance ▪ High insulation resistance ▪ Reliable failsafe device ▪ RoHS-compatible	▪ Branch exchange (MDF) ▪ Line protection ▪ Station protection

Electrical specifications

DC spark-over voltage [1) 2) 4)]		230 ± 20	V %
Impulse spark-over voltage [4)]			
at 100 V/µs	- for 99 % of measured values	< 400	V
	- typical values of distribution	< 350	V
at 1 kV/µs	- for 99 % of measured values	< 450	V
	- typical values of distribution	< 400	V
Service life			
10 operations	50 Hz, 1 s [5)]	10	A
1 operation	50 Hz, 0.18 s (9 cycles) [5)]	50	A
10 operations [5x (+) & 5x (-)]	8/20 µs [5)]	20	kA
1 operation	8/20 µs [5)]	25	kA
1 operation	10/350 µs [5)]	5	kA
300 operations	10/1000 µs [5)]	200	A
Insulation resistance at 100 V_{dc} [4)]		> 10	GΩ
Capacitance at 1 MHz [4)]		< 1.5	pF
Transverse delay time [3)]		< 0.2	µs
Arc voltage at 1 A		~ 35	V
Glow to arc transition current		~ 1	A
Glow voltage		~ 200	V
Weight		~ 2	g
Storage temperature		-40 ... +90	°C
Climatic category (IEC 60068-1)		40/ 90/ 21	
Marking, blue negative		**EPCOS** **230 YY O** 230 - Nominal voltage YY - Year of production O - Non radioactive	

a) xxxx = B102 (100 pcs. on tray)
B502 (500 pcs. on tray)

1) At delivery AQL 0.65 level II, DIN ISO 2859
2) In ionized mode
3) Test according to ITU-T Rec. K.12
4) Tip or ring electrode to center electrode
5) Total current through center electrode, half value through tip respectively ring electrode.

Terms in accordance with ITU-T Rec. K.12 and DIN 57845/VDE0845

The arrester failsafe mechanism contains a solder pellet with a melting temperature between 193 and 203 °C.

Dimensional drawing

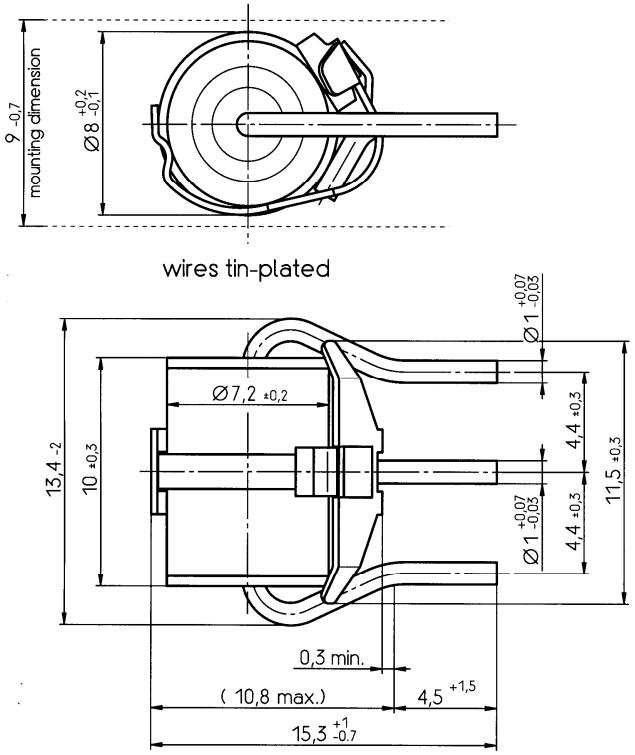

Not to scale

Dimensions in mm

Non controlled document

Cautions and warnings

- The short-circuit spring does not trigger until 180 °C is reached depending on the material. Care must be taken to limit the thermal radiation onto adjacent parts to safe values.
- Depending on the incorporation position, the surge arrester may have to be additionally secured by mechanical means.
- Surge arresters must not be operated directly in power supply networks.
- Surge arresters may become hot in case of longer periods of current stress (danger of burning).
- Surge arresters may be used only within their specified values. In case of overload, the head contacts may fail or the component may be destroyed.
- Damaged surge arresters must not be re-used.

Important notes

The following applies to all products named in this publication:

1. Some parts of this publication contain **statements about the suitability of our products for certain areas of application**. These statements are based on our knowledge of typical requirements that are often placed on our products in the areas of application concerned. We nevertheless expressly point out **that such statements cannot be regarded as binding statements about the suitability of our products for a particular customer application.** As a rule, EPCOS is either unfamiliar with individual customer applications or less familiar with them than the customers themselves. For these reasons, it is always ultimately incumbent on the customer to check and decide whether an EPCOS product with the properties described in the product specification is suitable for use in a particular customer application.
2. We also point out that **in individual cases, a malfunction of passive electronic components or failure before the end of their usual service life cannot be completely ruled out in the current state of the art, even if they are operated as specified.** In customer applications requiring a very high level of operational safety and especially in customer applications in which the malfunction or failure of a passive electronic component could endanger human life or health (e.g. in accident prevention or life-saving systems), it must therefore be ensured by means of suitable design of the customer application or other action taken by the customer (e.g. installation of protective circuitry or redundancy) that no injury or damage is sustained by third parties in the event of malfunction or failure of a passive electronic component.
3. **The warnings, cautions and product-specific notes must be observed**.
4. In order to satisfy certain technical requirements, **some of the products described in this publication may contain substances subject to restrictions in certain jurisdictions (e.g. because they are classed as "hazardous")**. Useful information on this will be found in our Material Data Sheets on the Internet (www.epcos.com/material). Should you have any more detailed questions, please contact our sales offices.
5. We constantly strive to improve our products. Consequently, **the products described in this publication may change from time to time**. The same is true of the corresponding product specifications. Please check therefore to what extent product descriptions and specifications contained in this publication are still applicable before or when you place an order.

   We also **reserve the right to discontinue production and delivery of products**. Consequently, we cannot guarantee that all products named in this publication will always be available.
6. Unless otherwise agreed in individual contracts, **all orders are subject to the current version of the "General Terms of Delivery for Products and Services in the Electrical Industry" published by the German Electrical and Electronics Industry Association (ZVEI)**.
7. The trade names EPCOS, BAOKE, Alu-X, CeraDiode, CSSP, MiniBlue, MKK, MLSC, MotorCap, PCC, PhaseCap, PhaseMod, SIFERRIT, SIFI, SIKOREL, SilverCap, SIMDAD, SIMID, SineFormer, SIOV, SIP5D, SIP5K, ThermoFuse, WindCap are **trademarks registered or pending** in Europe and in other countries. Further information will be found on the Internet at www.epcos.com/trademarks.