PART NUMBER	LED COLOR	REVISIONS			
		REV	ECN No	DRN	DATE
597-3008-202F	RED	A	—	KLJ	11-12-07
597-3008-207F	RED	A	—	KLJ	11-12-07
597-3208-202F	ORANGE	A	—	KLJ	11-12-07
597-3208-207F	ORANGE	A	—	KLJ	11-12-07
597-3308-202F	GREEN	A	—	KLJ	11-12-07
597-3308-207F	GREEN	A	—	KLJ	11-12-07
597-3408-202F	YELLOW	A	—	KLJ	11-12-07
597-3408-207F	YELLOW	A	—	KLJ	11-12-07

REV	ECN NO	REVISIONS	DRN	CKD	APP	DATE
A	—	NEW RELEASE	KLJ			

ATTENTION
OBSERVE PRECAUTIONS FOR HANDLING ELECTROSTATIC SENSITIVE DEVICES

ABSOLUTE MAXIMUM RATING AT 25°C AMBIENT		UNITS
OPERATING TEMPERATURE	-40 TO +100	°C
STORAGE TEMPERATURE	-40 TO +100	°C
JUNCTION TEMPERATURE	+125	°C
FOWARD CURRENT	20	mA
SURGE CURRENT	100	mA
REVERSE VOLTAGE	12	V
POWER CONSUMPTION	50	mW

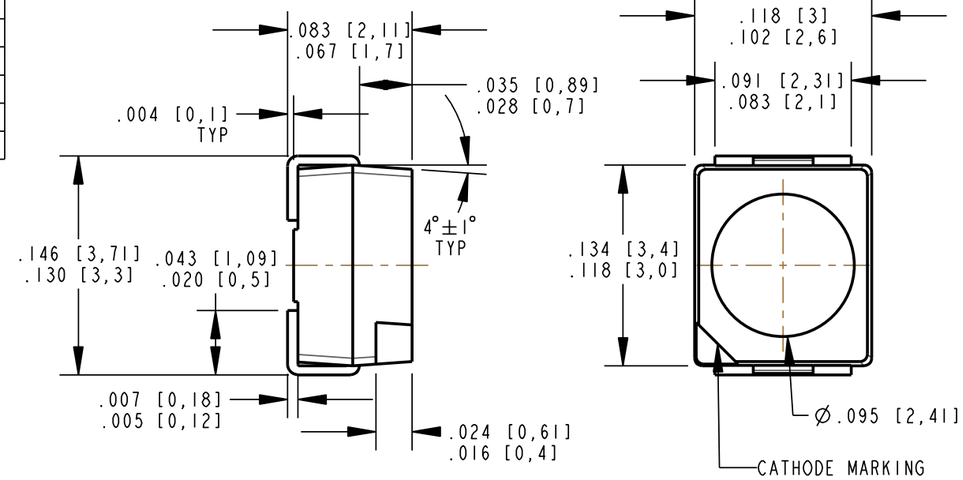

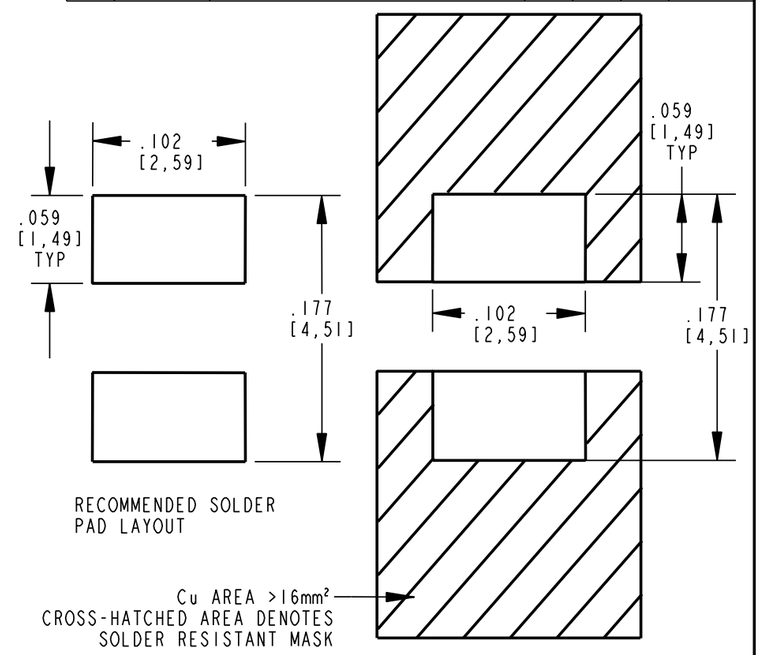

OPERATING CHARACTERISTICS AT 25°C AMBIENT						
CHARACTERISTICS	COLOR	MIN	TYP	MAX	UNITS	TEST CONDITIONS
LUMINOUS INTENSITY	RED	7.1	12.6	18.0	mcd	I_F = 2 mA
	GREEN	3.55	6.28	9.0		
	YELLOW	9.0	15.7	22.4		
	ORANGE	11.2	19.6	28.0		
	RED	—	65	—		I_F = 10 mA
	GREEN	—	31	—		
	YELLOW	—	80	—		
	ORANGE	—	100	—		
FORWARD VOLTAGE	RED	1.7	1.8	2.2	V	I_F = 2 mA
	GREEN	1.7	1.8	2.2		
	YELLOW	1.7	1.8	2.2		
	ORANGE	1.7	1.8	2.2		
REVERSE CURRENT	RED	—	0.01	10	µA	V_R = 12 V
	GREEN	—	0.01	10		
	YELLOW	—	0.01	10		
	ORANGE	—	0.01	10		
VIEWING ANGLE			120		Degree	
DOMINANT WAVELENGTH	RED	624	630	636	nm	I_F = 2 mA
	GREEN	566	570	575		
	YELLOW	580	587	595		
	ORANGE	600	606	609		
PEAK WAVELENGTH	RED	—	643	—	nm	I_F = 2 mA
	GREEN	—	572	—		
	YELLOW	—	591	—		
	ORANGE	—	610	—		

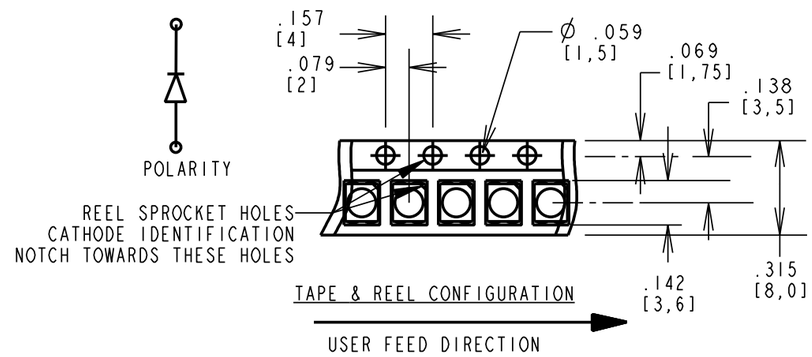

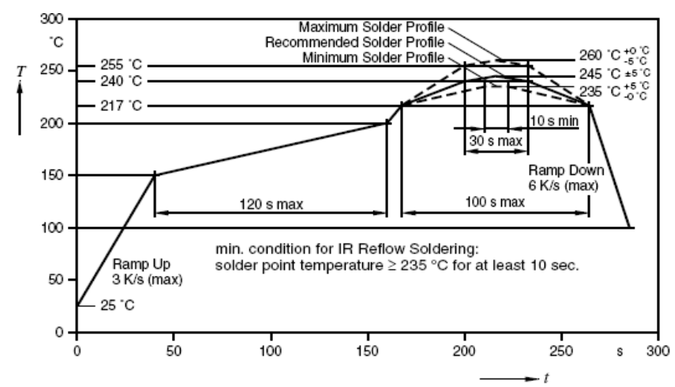

RECOMMENDED REFLOW SOLDERING PROFILE

RoHS Compliant 597-3X08-2XXF Surface Mount LED

Part Numbers with the "F" suffix ending are RoHS Compliant.
Example: 597-3308-207F
Reel and bag packaging are marked with "RoHS Compliant" label or equivalent markings. These parts can be used with RoHS reflow profile.
Parts can be wave soldered, dip soldered or hand soldered using typical lead-free soldering process with max 260°C temp. for 5 sec.

NOTES:
1. COLORLESS CLEAR WINDOW.
2. LED CHIP: InGaAlP
3. LED LEAD FINISH: PURE MATT TIN (Sn) 8.0±2.0 µm WITH NICKEL (Ni) UNDER LAYER OF COPPER (Cu).
4. 2000 PARTS/REEL, 180mm DIA. REEL WITH 12mm WIDTH CARRIER, REEL, AND PACKAGING HAS A LABEL WITH DIALIGHT LOGO, DIALIGHT P/N, QTY PER REEL, DATE CODE, LOT NUMBER, INTENSITY BIN CODE, COLOR BIN, AND COUNTRY OF ORIGIN.
5. DIALIGHT PART NUMBERS:
   597-3008-207F, FULL REEL 7" DIAM.; 597-3008-002F, SAMPLE STRIP 20 PCS/STRIP;
   597-3208-207F, FULL REEL 7" DIAM.; 597-3208-002F, SAMPLE STRIP 20 PCS/STRIP;
   597-3308-207F, FULL REEL 7" DIAM.; 597-3308-002F, SAMPLE STRIP 20 PCS/STRIP;
   597-3408-207F, FULL REEL 7" DIAM.; 597-3408-002F, SAMPLE STRIP 20 PCS/STRIP.
6. ESD WITHSTAND VOLTAGE: UP TO 2kV ACCORDING TO JESD22-A114-B
7. "ATTENTION" OBSERVE PRECAUTIONS FOR HANDLING ELECTROSTATIC SENSITIVE DEVICES. PACKAGE THIS PRODUCTION IN ANTI-STATIC BAG WITH ESD PRECAUTION LABEL P/N 9100-117-0505-00 ON EACH BAG. FOR EYE SAFETY, DO NOT STARE DIRECTLY INTO THE LIGHT BEAM OF THIS LED DEVICE AT CLOSE RANGE.
8. MOISTURE SENSITIVITY LEVEL 2.
9. TAPE AND REEL LEDS MAY REQUIRE RE-TAPING AFTER TWELVE MONTHS.

THIS DRAWING AND THE CONTENTS HEREIN ARE CONFIDENTIAL AND THE SOLE PROPERTY OF DIALIGHT. REPRODUCTION OF THIS DRAWING OR CONSTRUCTION OF ANY PARTS WITHIN THIS DRAWING ARE FORBIDDEN WITHOUT THE WRITTEN CONSENT OF DIALIGHT.

SCALE: 10.000
ALL DIM'S IN: INCHES (MM)
TOLERANCES: UNLESS OTHERWISE SPECIFIED
AS PER MFGR DATA SHEET
FINISH: -
FSCM 83330

DRAWING NUMBER C-17562 REV A
TITLE PLCC-2 LOW CURRENT 2mA SMT LED RoHS COMPLIANT
MATERIAL -

Dialight
1501 ROUTE 34 SOUTH
FARMINGDALE, NJ 07727

SHEET 1 OF 1 FAMILY TABLE: