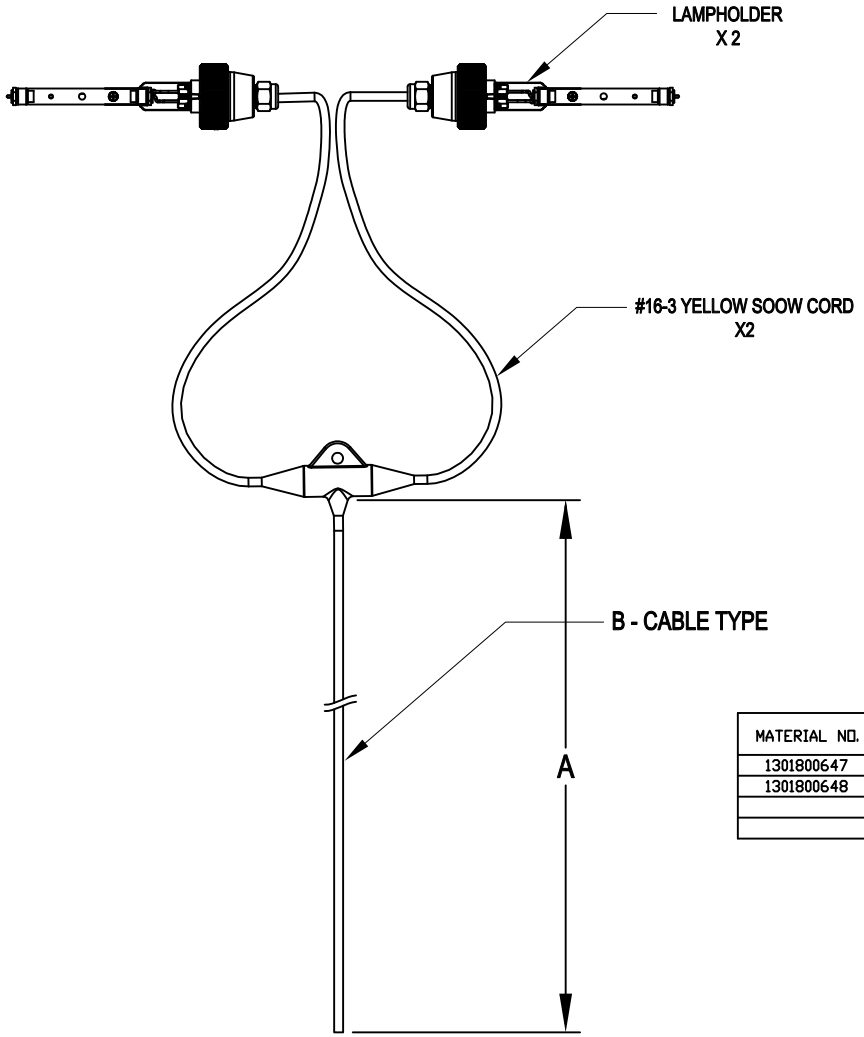

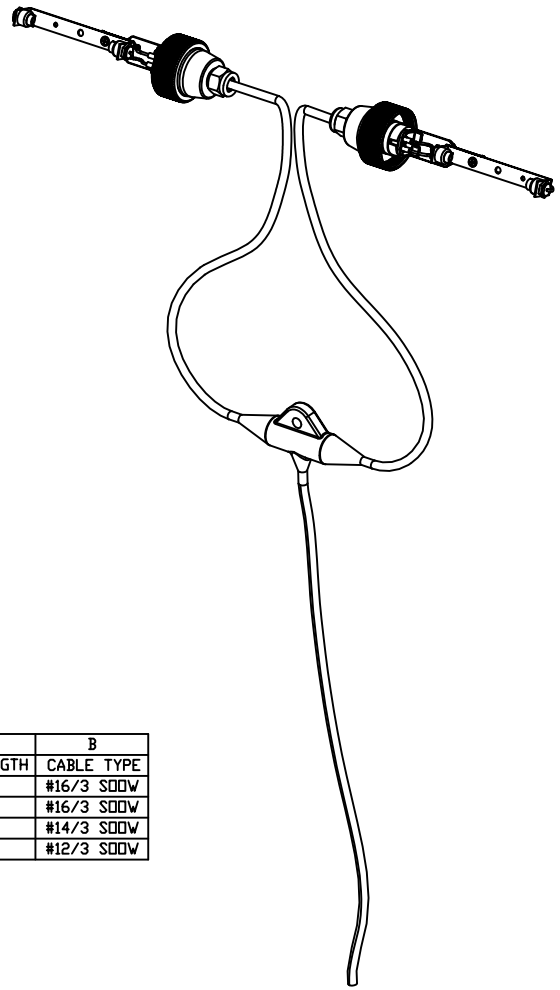

MATERIAL NO.	A	B
	CABLE LENGTH	CABLE TYPE
1301800647	25 FT	#16/3 SOOW
1301800648	50 FT	#16/3 SOOW
		#14/3 SOOW
		#12/3 SOOW

MODIFY TABLE — 11/5/09 —
EC NO: WNA2010-0311 DRWN: MCHOJECK CH'KD: — APPR: DTITUS 2010/01/04
DESCRIPTION
B
REV

QUALITY SYMBOLS
▼=0
Ⓒ=0

GENERAL TOLERANCES (UNLESS SPECIFIED)

	mm	INCH
4 PLACES	±---	±---
3 PLACES	±---	±---
2 PLACES	±---	±---
1 PLACE	±---	±---
ANGULAR ±---°		

DRAFT WHERE APPLICABLE MUST REMAIN WITHIN DIMENSIONS

DIMENSION STYLE: INCH
SCALE: NTS
DESIGN UNITS: INCH
THIRD ANGLE PROJECTION

DRAWN BY: MC DATE: 2009/08/28
CHECKED BY: DT DATE: 2009/08/28
APPROVED BY: DTITUS DATE: 2009/12/04

TITLE: LAMP CORE ASSEMBLY

---

molex MOLEX INCORPORATED

MATERIAL NO.: SEE TABLE
DOCUMENT NO.: SD-130180-002
SHEET NO.: 1 OF 1

SIZE: A

THIS DRAWING CONTAINS INFORMATION THAT IS PROPRIETARY TO MOLEX INCORPORATED AND SHOULD NOT BE USED WITHOUT WRITTEN PERMISSION