RADIALL Optical fiber components	TECHNICAL DATA SHEET	series F729	Issue 10 Jan. 02	Page 1/1

FC	PC COMPACTE "D" HOLE HOUSING ADAPTOR	Packaging : 1	F 7 2 9 7 0 2 0 0 0
	ZIRCONIA ALIGNEMENT SLEEVE	Packaging : 100	F 7 2 9 7 1 2 0 0 0

Original dimensions in mm [inch]

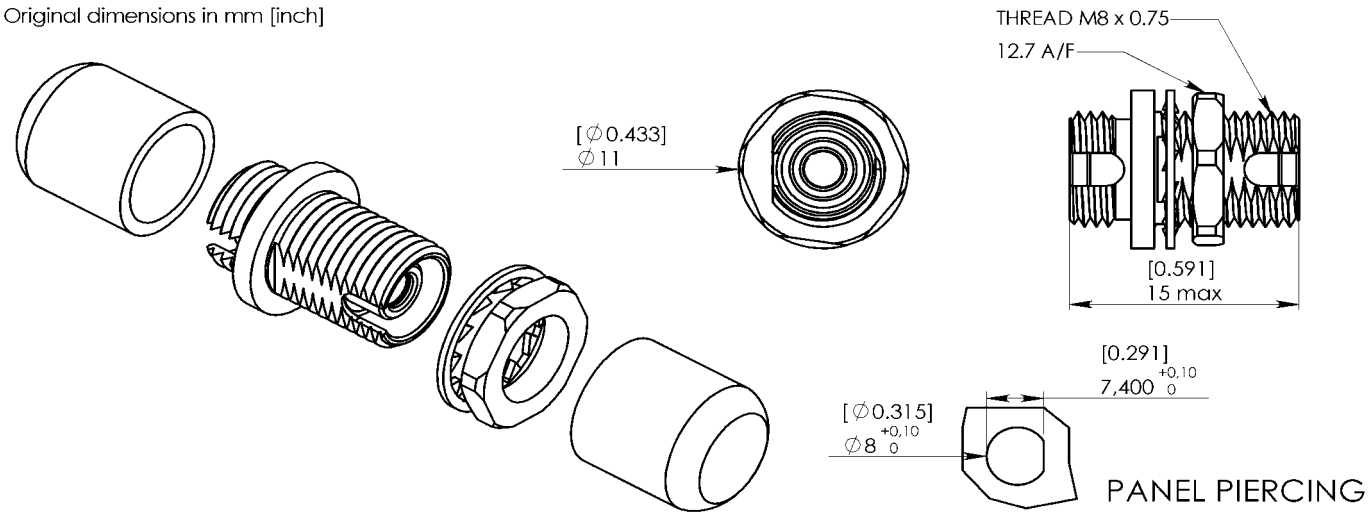

GENERAL

Type : IEC 61754-13 FC type.AI2Screw Thread coupling

Mounting : compact " D " hole - 8 mm max. panel thickness 2 mm

Alignment sleeve : zirconia

CHARACTERISTICS *(Dependant on fiber or cable construction)*

Material : **brass, nickel plated**

Optical : Attenuation (according to IEC 1300-3-4:Substitution method, 7 type) at 1310nm : 0,25 dB Max
0,07 dB Typ

Mechanical : ***Durability*** Bellcore 326, 200 cycles
Plug Retention > 100N

Environmental : **Temperature range** (storage/operating) -40°C to +85°C / -40°C to +70°C

Salt spray : EIA/TIA-455-16A, 35°C,168 hr.

Vibration test : Bellcore 326, 10 to 50 Hz, 2 hrs./axis

Proof test : Bellcore 326, Straight pull : 10Kg load at 0°
Side pull : 4,5 Kg load at 90°

CREATION					
N° :					
PEN/EP : CAT.					
Name : CAUSSE C.					
Date : 23 Juil99	1/09/02	performance specified	VALENCIA		
App. : LV	Issue	Revisions	Name	App.	

RADIALL
101, rue P. Hoffmann - Z.I. Ouest
93116 ROSNY / BOIS Cedex-France
Phone : (0033) 149353535
Fax : (0033) 48546363

This information is given as an indication. In the continual goal to improve our products, we reserve the right to make any modifications judged necessary