THIS DRAWING IS UNPUBLISHED. RELEASED FOR PUBLICATION 20
© COPYRIGHT 20 BY - ALL RIGHTS RESERVED.

LOC	DIST
AD	00

REVISIONS

P	LTR	DESCRIPTION	DATE	DWN	APVD
	B3	REVISED PER ECO-11-005027	12MAR2011	RK	HMR

1. MATERIAL:
   CONTACT: BRASS
   LATCH HOUSING, INSERT, COLLET, COLLET NUT:
   UL 94V-0 RATED THERMOPLASTIC
   COLOR:
   COLLET AND INSERT: GRAY
   LATCH HOUSING AND NUT: SEE TABLE

2. FINISH:
   CONTACT, 0.75µm MIN. GOLD OVER NICKEL

3. SOLDER TERMINATION CONTACT, 28 AWG WIRE MAX.

4. PRODUCT IS SUPPLIED UNASSEMBLED.

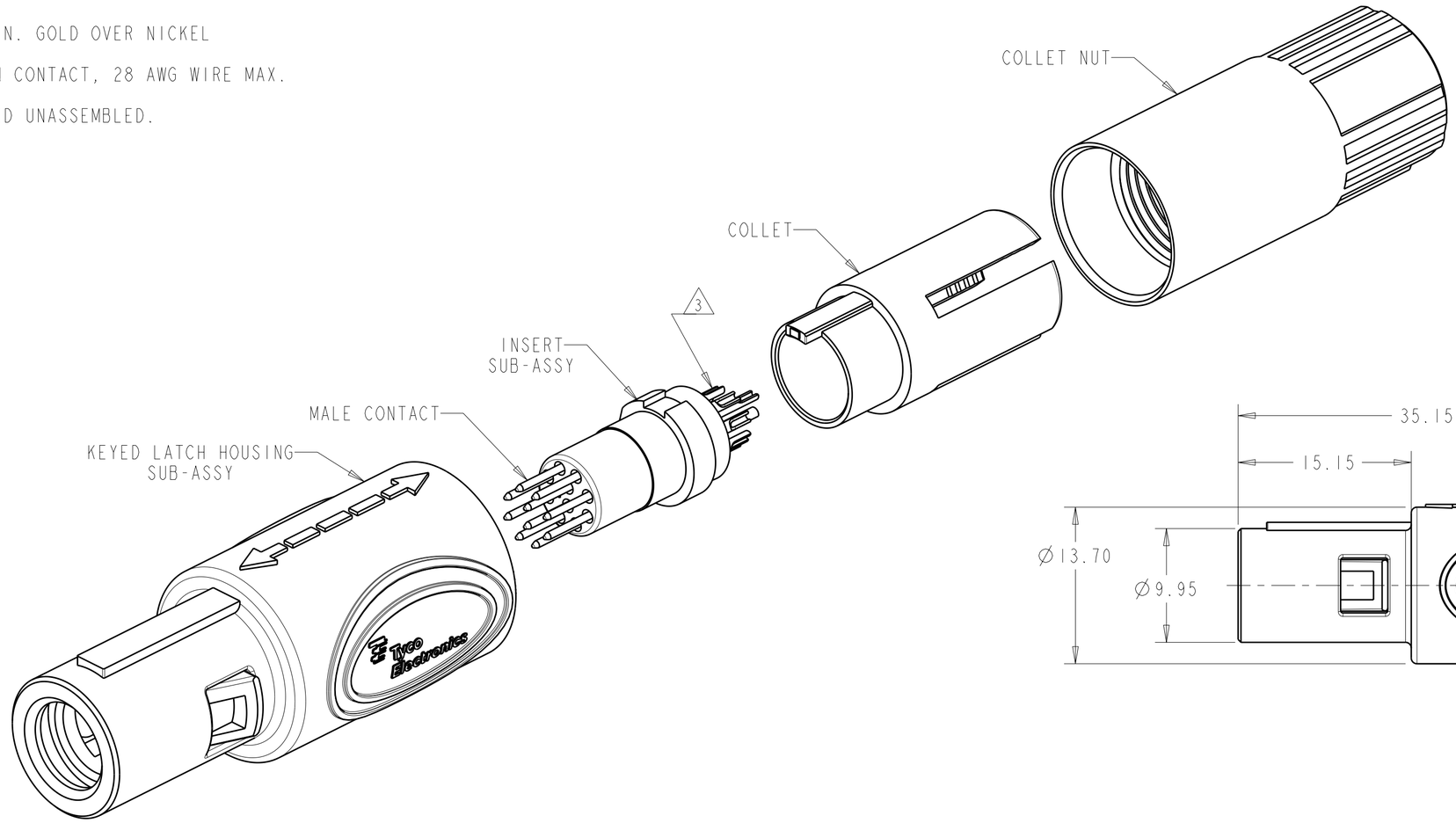

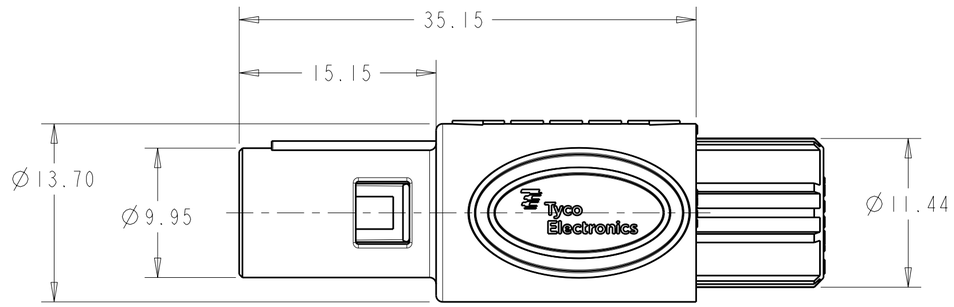

SCALE 3:1

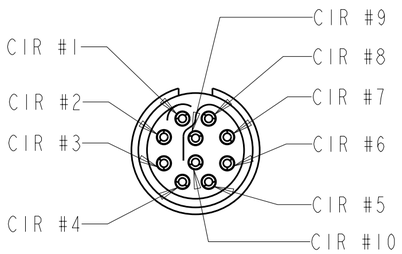

INSERT SUB-ASSY
CIRCUIT DESIGNATION VIEW

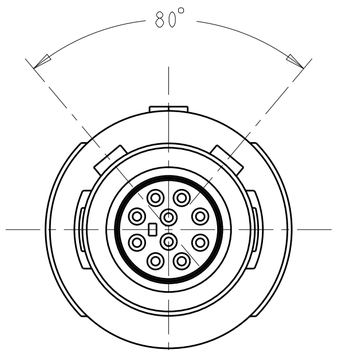

80° KEYING
SCALE 4:1

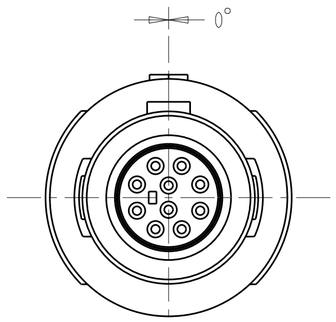

0° KEYING
SCALE 4:1

SEE SHEET 2 FOR PART NUMBER SELECTION

PART NO.

THIS DRAWING IS A CONTROLLED DOCUMENT.

DIMENSIONS: mm

TOLERANCES UNLESS OTHERWISE SPECIFIED:

0 PLC	±-
1 PLC	±0.13
2 PLC	±0.08
3 PLC	±-
4 PLC	±-
ANGLES	±1°

MATERIAL 1

FINISH 2

DWN	K. MILLER	09MAR2006
CHK	L.BREKOSKY	09MAR2006
APVD	-	

PRODUCT SPEC 108-2249

APPLICATION SPEC 114-13184

WEIGHT -

CUSTOMER DRAWING

TE Connectivity

NAME: 10 POSITION, CABLE COLLET STRAIGHT PLUG ASSEMBLY 0 AND 80 DEGREE KEYING

SIZE	CAGE CODE	DRAWING NO	RESTRICTED TO
A2	00779	C-1877848	-

SCALE 4:1 SHEET 1 OF 3 REV B3

1471-9 (3/11)

Pro/ENGINEER DRAWING

THIS DRAWING IS UNPUBLISHED. RELEASED FOR PUBLICATION 20
© COPYRIGHT 20 BY - ALL RIGHTS RESERVED.

LOC	DIST
AD	00

REVISIONS

P	LTR	DESCRIPTION	DATE	DWN	APVD
	-	SEE SHEET 1	-	-	-

CABLE RANGE	COLLET NUT COLOR	LATCH HOUSING COLOR	KEYING	PART NO.
Ø2.7-Ø3.9	BLUE	GRAY	80°	7-1877848-2
Ø4.0-Ø5.2	BLUE	GRAY	80°	7-1877848-1
Ø5.3-Ø6.5	BLUE	GRAY	80°	7-1877848-0
Ø2.7-Ø3.9	BLUE	GRAY	0°	6-1877848-9
Ø4.0-Ø5.2	BLUE	GRAY	0°	6-1877848-8
Ø5.3-Ø6.5	BLUE	GRAY	0°	6-1877848-7
Ø2.7-Ø3.9	BLUE	BLACK	80°	6-1877848-6
Ø4.0-Ø5.2	BLUE	BLACK	80°	6-1877848-5
Ø5.3-Ø6.5	BLUE	BLACK	80°	6-1877848-4
Ø2.7-Ø3.9	BLUE	BLACK	0°	6-1877848-3
Ø4.0-Ø5.2	BLUE	BLACK	0°	6-1877848-2
Ø5.3-Ø6.5	BLUE	BLACK	0°	6-1877848-1
Ø2.7-Ø3.9	GREEN	GRAY	80°	6-1877848-0
Ø4.0-Ø5.2	GREEN	GRAY	80°	5-1877848-9
Ø5.3-Ø6.5	GREEN	GRAY	80°	5-1877848-8
Ø2.7-Ø3.9	GREEN	GRAY	0°	5-1877848-7
Ø4.0-Ø5.2	GREEN	GRAY	0°	5-1877848-6
Ø5.3-Ø6.5	GREEN	GRAY	0°	5-1877848-5
Ø2.7-Ø3.9	GREEN	BLACK	80°	5-1877848-4
Ø4.0-Ø5.2	GREEN	BLACK	80°	5-1877848-3
Ø5.3-Ø6.5	GREEN	BLACK	80°	5-1877848-2
Ø2.7-Ø3.9	GREEN	BLACK	0°	5-1877848-1
Ø4.0-Ø5.2	GREEN	BLACK	0°	5-1877848-0
Ø5.3-Ø6.5	GREEN	BLACK	0°	4-1877848-9
Ø2.7-Ø3.9	YELLOW	GRAY	80°	4-1877848-8
Ø4.0-Ø5.2	YELLOW	GRAY	80°	4-1877848-7
Ø5.3-Ø6.5	YELLOW	GRAY	80°	4-1877848-6
Ø2.7-Ø3.9	YELLOW	GRAY	0°	4-1877848-5
Ø4.0-Ø5.2	YELLOW	GRAY	0°	4-1877848-4
Ø5.3-Ø6.5	YELLOW	GRAY	0°	4-1877848-3
Ø2.7-Ø3.9	YELLOW	BLACK	80°	4-1877848-2
Ø4.0-Ø5.2	YELLOW	BLACK	80°	4-1877848-1
Ø5.3-Ø6.5	YELLOW	BLACK	80°	4-1877848-0
Ø2.7-Ø3.9	YELLOW	BLACK	0°	3-1877848-9
Ø4.0-Ø5.2	YELLOW	BLACK	0°	3-1877848-8
Ø5.3-Ø6.5	YELLOW	BLACK	0°	3-1877848-7

PART NUMBERS 37 THRU 72

CABLE RANGE	COLLET NUT COLOR	LATCH HOUSING COLOR	KEYING	PART NO.
Ø2.7-Ø3.9	WHITE	GRAY	80°	3-1877848-6
Ø4.0-Ø5.2	WHITE	GRAY	80°	3-1877848-5
Ø5.3-Ø6.5	WHITE	GRAY	80°	3-1877848-4
Ø2.7-Ø3.9	WHITE	GRAY	0°	3-1877848-3
Ø4.0-Ø5.2	WHITE	GRAY	0°	3-1877848-2
Ø5.3-Ø6.5	WHITE	GRAY	0°	3-1877848-1
Ø2.7-Ø3.9	WHITE	BLACK	80°	3-1877848-0
Ø4.0-Ø5.2	WHITE	BLACK	80°	2-1877848-9
Ø5.3-Ø6.5	WHITE	BLACK	80°	2-1877848-8
Ø2.7-Ø3.9	WHITE	BLACK	0°	2-1877848-7
Ø4.0-Ø5.2	WHITE	BLACK	0°	2-1877848-6
Ø5.3-Ø6.5	WHITE	BLACK	0°	2-1877848-5
Ø2.7-Ø3.9	RED	GRAY	80°	2-1877848-4
Ø4.0-Ø5.2	RED	GRAY	80°	2-1877848-3
Ø5.3-Ø6.5	RED	GRAY	80°	2-1877848-2
Ø2.7-Ø3.9	RED	GRAY	0°	2-1877848-1
Ø4.0-Ø5.2	RED	GRAY	0°	2-1877848-0
Ø5.3-Ø6.5	RED	GRAY	0°	1-1877848-9
Ø2.7-Ø3.9	RED	BLACK	80°	1-1877848-8
Ø4.0-Ø5.2	RED	BLACK	80°	1-1877848-7
Ø5.3-Ø6.5	RED	BLACK	80°	1-1877848-6
Ø2.7-Ø3.9	RED	BLACK	0°	1-1877848-5
Ø4.0-Ø5.2	RED	BLACK	0°	1-1877848-4
Ø5.3-Ø6.5	RED	BLACK	0°	1-1877848-3
Ø2.7-Ø3.9	GRAY	GRAY	80°	1-1877848-2
Ø4.0-Ø5.2	GRAY	GRAY	80°	1-1877848-1
Ø5.3-Ø6.5	GRAY	GRAY	80°	1-1877848-0
Ø2.7-Ø3.9	GRAY	GRAY	0°	1877848-9
Ø4.0-Ø5.2	GRAY	GRAY	0°	1877848-8
Ø5.3-Ø6.5	GRAY	GRAY	0°	1877848-7
Ø2.7-Ø3.9	BLACK	BLACK	80°	1877848-6
Ø4.0-Ø5.2	BLACK	BLACK	80°	1877848-5
Ø5.3-Ø6.5	BLACK	BLACK	80°	1877848-4
Ø2.7-Ø3.9	BLACK	BLACK	0°	1877848-3
Ø4.0-Ø5.2	BLACK	BLACK	0°	1877848-2
Ø5.3-Ø6.5	BLACK	BLACK	0°	1877848-1

PART NUMBERS 1 THRU 36

THIS DRAWING IS A CONTROLLED DOCUMENT.

DIMENSIONS: mm

TOLERANCES UNLESS OTHERWISE SPECIFIED:
0 PLC ±-
1 PLC ±0.13
2 PLC ±0.08
3 PLC ±-
4 PLC ±-
ANGLES ±1°

MATERIAL -
FINISH -

DWN K. MILLER 09MAR2006
CHK L.BREKOSKY 09MAR2006
APVD -
PRODUCT SPEC 108-2249
APPLICATION SPEC 114-13184
WEIGHT -

TE Connectivity

NAME
10 POSITION, CABLE COLLET
STRAIGHT PLUG ASSEMBLY
0 AND 80 DEGREE KEYING

SIZE	CAGE CODE	DRAWING NO	RESTRICTED TO
A2	00779	C-1877848	-

CUSTOMER DRAWING | SCALE 4:1 | SHEET 2 OF 3 | REV B3

THIS DRAWING IS UNPUBLISHED. RELEASED FOR PUBLICATION 20
© COPYRIGHT 20 BY - ALL RIGHTS RESERVED.

LOC	DIST
AD	00

REVISIONS

P	LTR	DESCRIPTION	DATE	DWN	APVD
	-	SEE SHEET 1	-	-	-

Ø2.7-Ø3.9	BLACK	GRAY	80°	8-1877848-4
Ø4.0-Ø5.2	BLACK	GRAY	80°	8-1877848-3
Ø5.3-Ø6.5	BLACK	GRAY	80°	8-1877848-2
Ø2.7-Ø3.9	BLACK	GRAY	0°	8-1877848-1
Ø4.0-Ø5.2	BLACK	GRAY	0°	8-1877848-0
Ø5.3-Ø6.5	BLACK	GRAY	0°	7-1877848-9
Ø2.7-Ø3.9	GRAY	BLACK	80°	7-1877848-8
Ø4.0-Ø5.2	GRAY	BLACK	80°	7-1877848-7
Ø5.3-Ø6.5	GRAY	BLACK	80°	7-1877848-6
Ø2.7-Ø3.9	GRAY	BLACK	0°	7-1877848-5
Ø4.0-Ø5.2	GRAY	BLACK	0°	7-1877848-4
Ø5.3-Ø6.5	GRAY	BLACK	0°	7-1877848-3
CABLE RANGE	COLLET NUT COLOR	LATCH HOUSING COLOR	KEYING	PART NO.

PART NUMBERS 73 THRU 84

THIS DRAWING IS A CONTROLLED DOCUMENT.

DIMENSIONS: mm

TOLERANCES UNLESS OTHERWISE SPECIFIED:

0 PLC	±-
1 PLC	±0.13
2 PLC	±0.08
3 PLC	±-
4 PLC	±-
ANGLES	±1°

MATERIAL -

FINISH -

DWN K. MILLER 09MAR2006
CHK L.BREKOSKY 09MAR2006
APVD -
PRODUCT SPEC 108-2249
APPLICATION SPEC 114-13184
WEIGHT -

TE Connectivity

NAME 10 POSITION, CABLE COLLET STRAIGHT PLUG ASSEMBLY 0 AND 80 DEGREE KEYING

SIZE	CAGE CODE	DRAWING NO	RESTRICTED TO
A2	00779	C-1877848	-

CUSTOMER DRAWING | SCALE 4:1 | SHEET 3 OF 3 | REV B3

1471-9 (3/11)