CURRENT REGULATIVE DIODE

CRD

CRD is a diode which supplies constant current to an electric circuit, even when power supply voltage fluctuations or load impedance fluctuations occur.
CRD is used for current stabilization and current limiting.

Part number

□ 102 □

- Packing condition
  - None : E Series, Individually packed in a bag
  - 26Z : E Series, 26mm wide axial taping winding type
  - 26R : E Series, 26mm wide axial taping role type
  - 52Z : E Series, 52mm wide axial taping winding type
  - 52R : E Series, 52mm wide axial taping role type
  - RE : E Series, Radial taping winding type
  - T : S Series, Taping role
- Pinch off current
  - e.g.) : 301⇒30×10¹μA=0.3mA
  - 102⇒10×10²μA=1.0mA
  - 452⇒45×10²μA=4.5mA
- E : Lead wire type
- S : SMD type

Basic characteristics

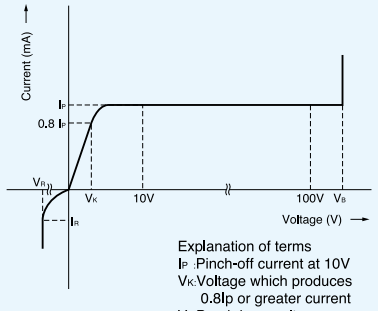

Explanation of terms
- I_P :Pinch-off current at 10V
- V_K:Voltage which produces 0.8Ip or greater current
- V_B:Breakdown voltage
- I_R :Permitted reverse current

Ratings

	E series	S series
Rating power	300mW	500mW
Rated voltage (Pulse wave)	100V(E-101~E-562)	100V(S-101T~S-562T)
	50V(E-822~E-183)	50V(S-822T~S-183T)
Reverse current	50mA	
Junction temp	150°C	
Operating temp	−30°C~150°C	−40°C~150°C

Maximum rating voltage

Part No.	Voltage	Part No.	Voltage
E101~E-562	100V	S-101T~S-562T	100V
E-822	30	S-822T	50
E-103		S-103T	
E-123		S-123T	
E-153	25	S-153T	
E-183		S-183T	40

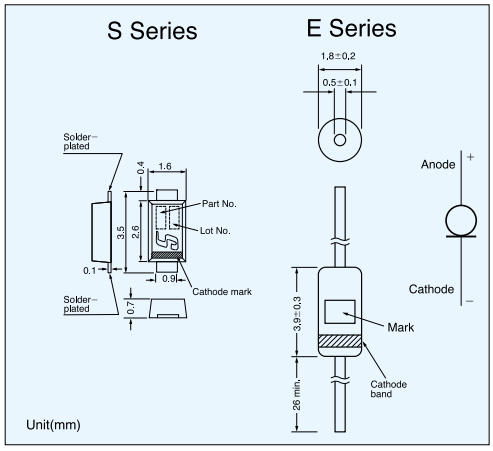

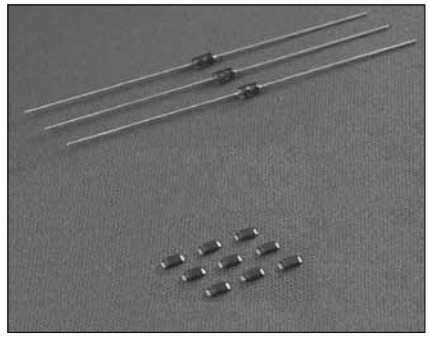

Specifications

Part No.		Pinch-off current*1			Limiting current*2		Limiting current ratio	Temperature*3 Coefficient
SMD	With Lead	Test Voltage	Ip(mA) Typical	min~max	V_K(V)	I_K(mA)	I_{100V}/Ip* I_{30V}/Ip	(% /°C)
S-101T	E-101	10V	0.10	0.05~0.21	0.5	0.8 Ipmin	1.1max	+2.10~+0.10
S-301T	E-301		0.30	0.20~0.42	0.8			+0.40~−0.20
S-501T	E-501		0.50	0.40~0.63	1.1			+0.15~−0.25
S-701T	E-701		0.70	0.60~0.92	1.4			0.00~−0.32
S-102T	E-102		1.00	0.88~1.32	1.7			−0.10~−0.37
S-152T	E-152		1.50	1.28~1.72	2.0			−0.13~−0.40
S-202T	E-202		2.00	1.68~2.32	2.3			−0.15~−0.42
S-272T	E-272		2.70	2.28~3.10	2.7			−0.18~−0.45
S-352T	E-352		3.50	3.00~4.10	3.2			−0.20~−0.47
S-452T	E-452		4.50	3.90~5.10	3.7			−0.22~−0.50
S-562T	E-562		5.60	5.00~6.50	4.5			−0.25 ~−0.53
S-822T	E-822		8.20	6.56~9.84	3.1		*1.0max	−0.25 ~−0.45
S-103T	E-103		10.0	8.00~12.0	3.5			−0.25 ~−0.45
S-123T	E-123		12.0	9.60~14.4	3.8			−0.25 ~−0.45
S-153T	E-153		15.0	12.0~18.0	4.3			−0.25 ~−0.45
S-183T	E-183		18.0	16.0~20.0	4.6			−0.25 ~−0.45

*1,*2 Pinch-off current limiting current are measured by impulse wave at 25°C
*3 Temperature coefficient is measured between 25°C and 50°C.
*I_{30}/Ip

Taping

There are three Types for taping.

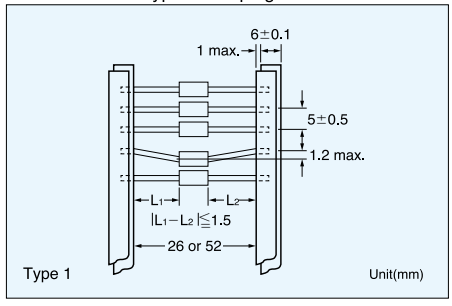

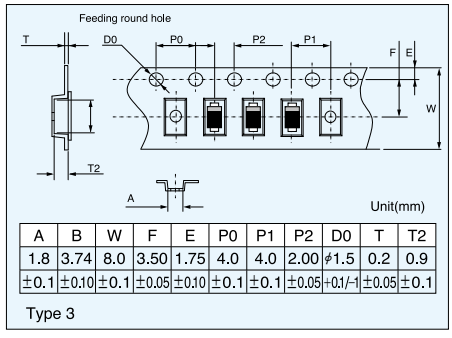

A	B	W	F	E	P0	P1	P2	D0	T	T2
1.8	3.74	8.0	3.50	1.75	4.0	4.0	2.00	ϕ1.5	0.2	0.9
±0.1	±0.10	±0.1	±0.05	±0.10	±0.1	±0.1	±0.05	+0.1/−1	±0.05	±0.1

*In principal elements are set with cathode side on the round hole side.

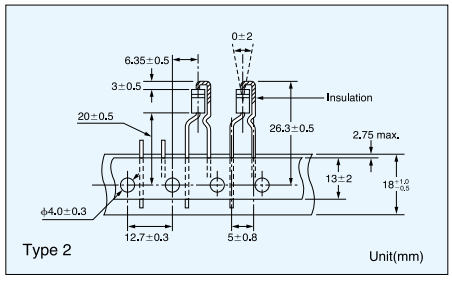

Minimum taping quantity for

Type 1 Roll·····5000pcs
Box·····2500pcs
Type 2 4000pcs
Type 3 3000pcs

Power derating

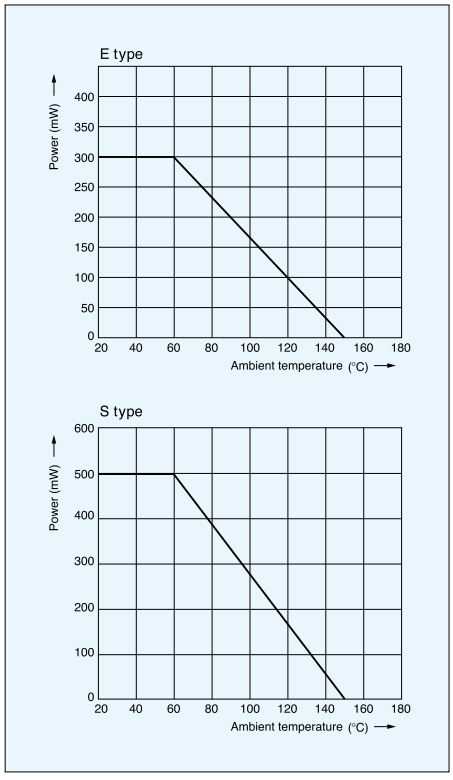

Pinch-off current Temperature

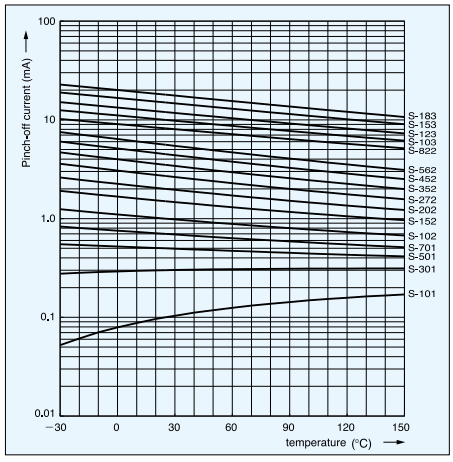

CRD in parallel

The use of CRD in parallel increases their current handling capabilities.

Increasing the voltage range using a zener diode

Connecting zener diodes in series with the line ensures that the current is constant in high-voltage area.

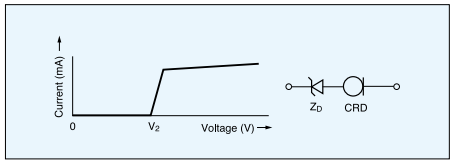

The compensation of current reduction due to self heating

Placing resistors in parallel with CRD can correct any current decrease when the applied voltage increases. The following values are typical for correction resistors.

E-102	1MΩ	E-352	82kΩ
E-152	390kΩ	E-452	56kΩ
E-202	240kΩ	E-562	39kΩ
E-272	120kΩ		

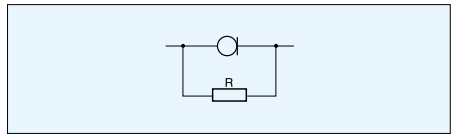

Compensative resistor is not necessary if the current value is less than 1 mA.

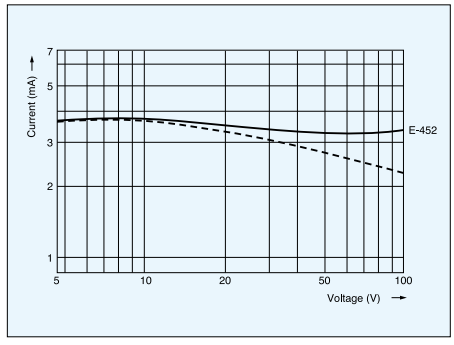
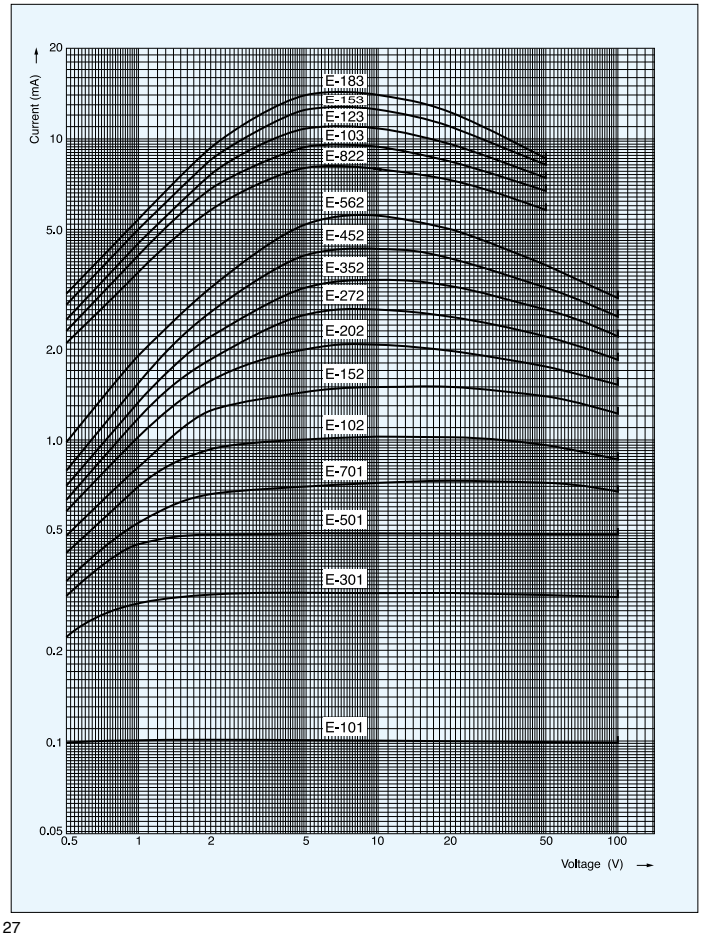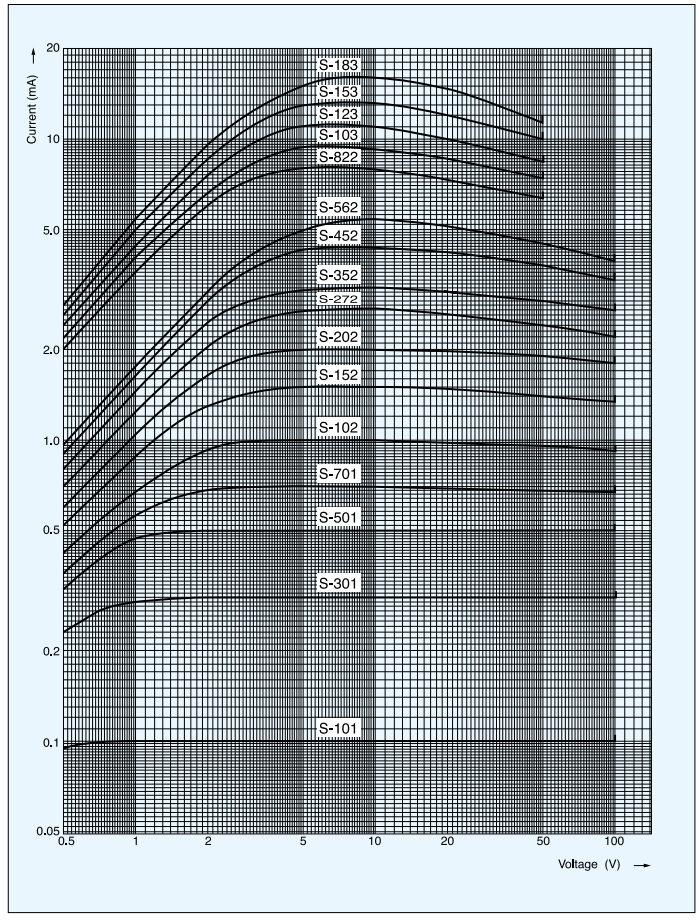
Dynamic characteristics (saturation characteristics)