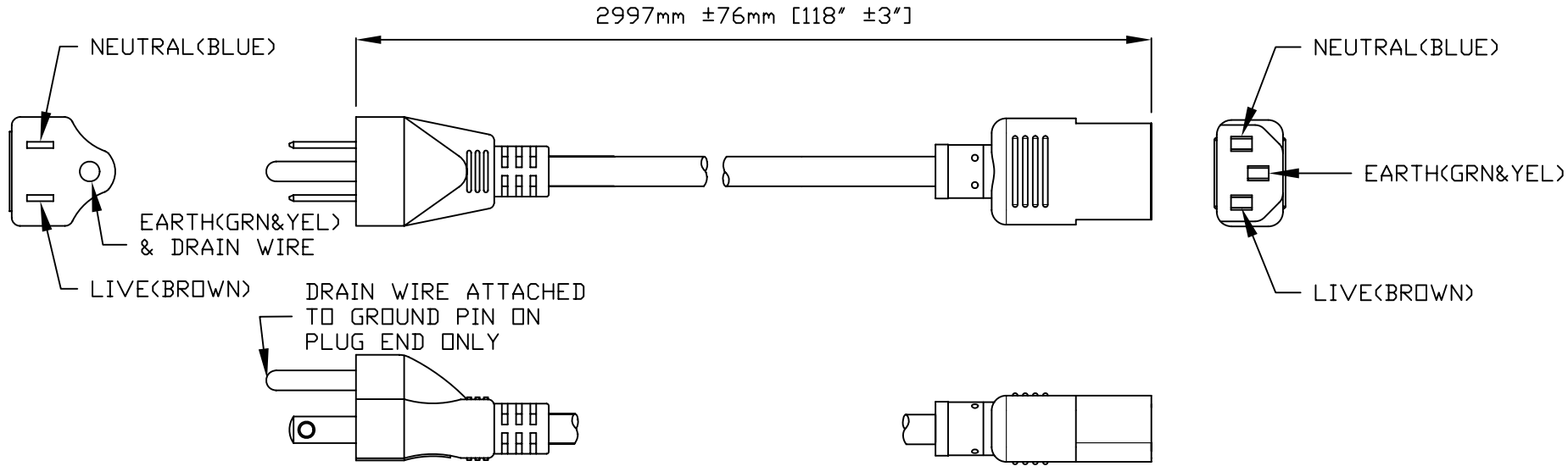

VOLEX RESERVES THE RIGHT
TO ALTER NON-CRITICAL
DIMENSIONS WITHOUT NOTICE.

PACKAGING: FOLD & TIE

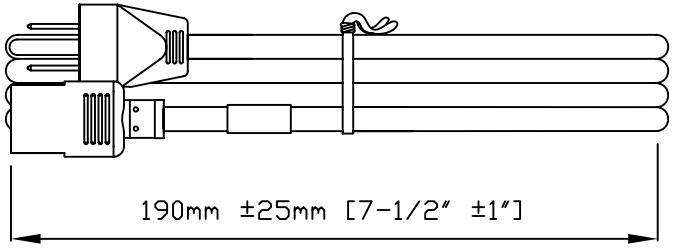

NOTES:

1) CORDAGE: 18/3 SVT, FOIL SHIELDED, 60°C, BLACK
2) APPROVALS: UL
3) RATING: 10 AMP/125 VOLTS
4) FLAME RATING : FT2
5) PACKAGING: 35 PIECES PER CARTON

REV	DESCRIPTION	DATE
1	C.U.D - NEW RELEASE	6/5/07

Volex
CUD
FORM IN71-07 REV.A

- ☒ Indianapolis, IN
- ☐ Conover, N.C.
- ☐ Freemont, CA
- ☐ Aguascalientes, MX
- ☐ Tijuana, Mexico
- ☐ Hermosillo, MX
- ☐ Clinton, AR
- ☐ Kanata, Canada

Proprietary Notice:

This document is the property of Volex Incorporated. The information contained herein is not to be disclosed to anyone without the express written consent of Volex Inc.

MATERIAL:
CONNECTOR,PLUG: PVC, BLACK
JACKET: PVC, BLACK
ROHS COMPLIANT

FINISH:
JACKET: SMOOTH

SCALE: NOT TO SCALE
ECO: N/A

TOLERANCE UNLESS OTHERWISE SPECIFIED
.XXX ± .005
.XX ± .02
.X ± .03
FRACT. ± 1/32
ANGULAR ± 1/2°

ITEM DESCRIPTION
CORDSET - NORTH AMERICAN
DETACHABLE POWER SUPPLY CORD (9'10")

APPROVED	DRAWN BY	DATE:
STC	STC	6/5/07

PART NO.
17743 10 B1