MICRO SWITCH
a Honeywell Division
FED. MFG. CODE 91929

SWITCH - ENCLOSED

CATALOG LISTING
BFL1-BW4

NOTES
1 - 3X 6-32 UNC PRESSURE PLATE TERMINAL SCREWS
2 FURNISHED UNASSEMBLED

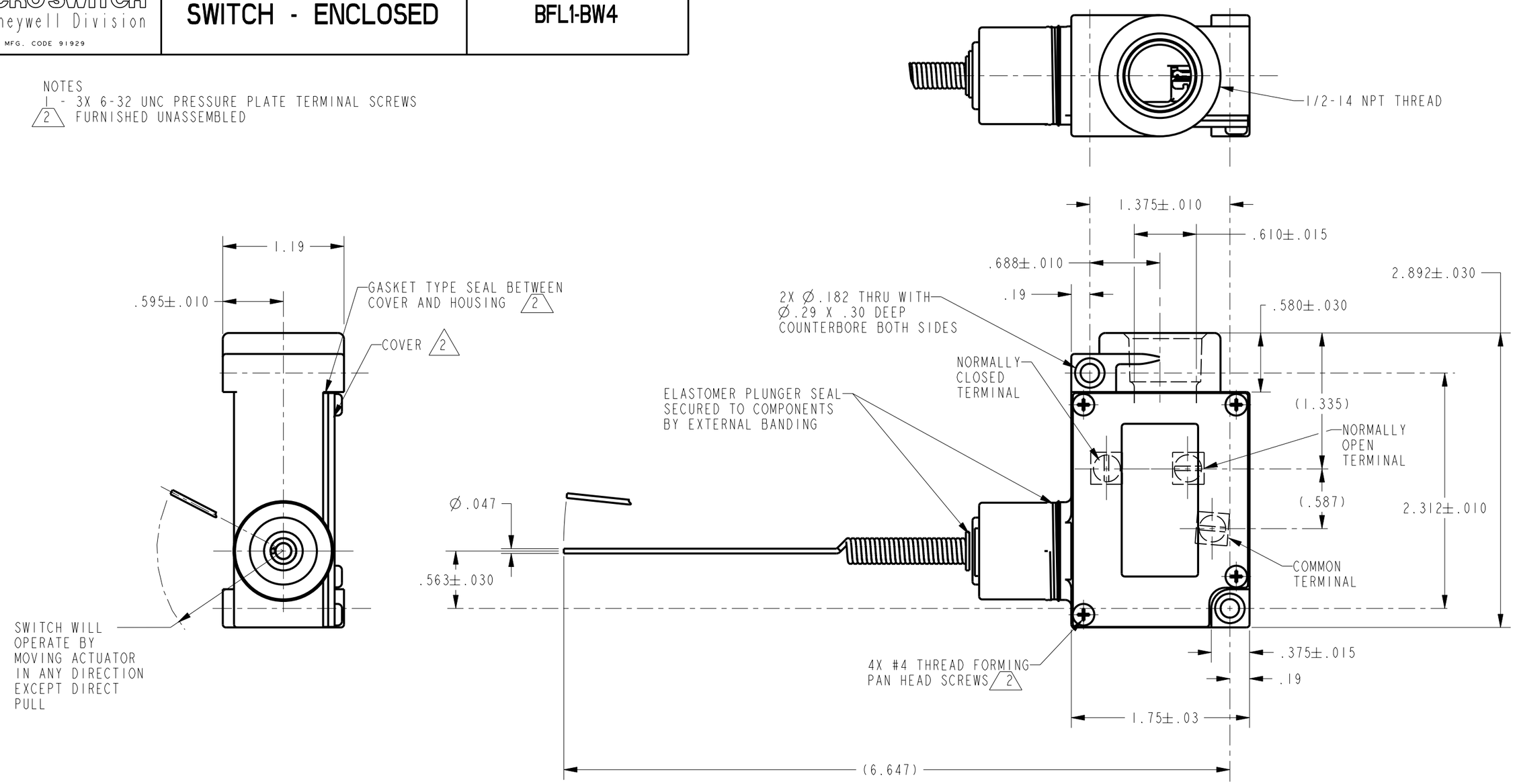

THIS DRAWING COVERS A PROPRIETARY ITEM AND IS THE PROPERTY OF MICRO SWITCH. A DIVISION OF HONEYWELL. THIS DRAWING IS NOT TO BE COPIED OR USED WITHOUT THE APPROVAL OF MICRO SWITCH

THIRD ANGLE PROJECTION

SCALE FULL

DO NOT SCALE PRINT

UNLESS OTHERWISE SPECIFIED TOLERANCES ARE

ONE PLACE	(.0)	±.030
TWO PLACE	(.00)	±.015
THREE PLACE	(.000)	±.005
ANGLES		±

WEIGHT

ANSI Y14.5M-1982 APPLIES

CHARACTERISTICS	ELECTRICAL DATA
OPERATING FORCE ..... 7 OZ MAX	CONTACT ARRANGEMENT S P D T L156 11A 1/3HP 125, 250, 277 VAC = 1/2A 125 VDC, 1/4A 250 VDC 4A 125 VAC "L"

BFL1-BW4
CATALOG LISTING
PAGE 1 OF 1
ISSUE 1
REVISIONS
REPLACES 22AUG00
RELEASE NO. 203802
CHECK
CHECK 7SEP01
SAV
CHECK
7SEP01
PTC/CAD 2D
DRAWN KED