Part Number: 0351500412

Status: Active

Overview: VersaBlade™ Wire-to-Wire Connector System

Description: Wire-to-Wire VersaBlade™ Hybrid Plug Housing, with Mounting Ears, 4 Circuits, Polyester UL94V-0, Red

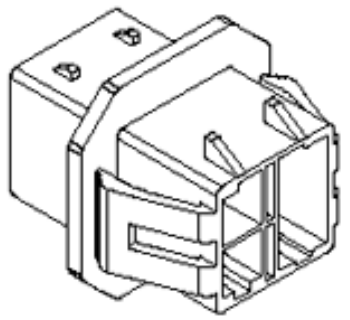

Series image - Reference only

Documents:

3D Model
Drawing (PDF)
Packaging Specification PK-35150-004 (PDF)
RoHS Certificate of Compliance (PDF)

Agency Certification

CSA	LR19980
TUV	R72090206
UL	E29179

General

Product Family	Crimp Housings
Series	35150
Application	Power, Wire-to-Wire
Comments	Polarized to Mating Part, Positive Lock
Overview	VersaBlade™ Wire-to-Wire Connector System
Product Name	VersaBlade™
UPC	822348085316

Physical

Circuits (maximum)	4
Color - Resin	Red
Flammability	94V-0
Gender	Female
Glow-Wire Compliant	No
Keying to Mating Part	None
Lock to Mating Part	Yes
Material - Resin	Polyester
Net Weight	4.840/g
Number of Rows	2
Packaging Type	Bag
Panel Mount	Yes
Pitch - Mating Interface	6.20mm, 8.90mm
Polarized to Mating Part	Yes
Stackable	No
Temperature Range - Operating	-40°C to +120°C

Solder Process Data

Lead-freeProcess Capability	N/A

Material Info

Reference - Drawing Numbers

Packaging Specification	PK-35150-004
Sales Drawing	SD-35150-0410

EU ELV
Not Relevant

EU RoHS
Compliant

China RoHS

REACH SVHC
Contains SVHC(17. December 2014): No

Halogen-Free Status
Not Low-Halogen

Need more information on product environmental compliance?

Email productcompliance@molex.com
Please visit the Contact Us section for any non-product compliance questions.

China ROHS	Green Image
ELV	Not Relevant

Search Parts in this Series
35150 Series

Mates With
35151 Receptacle Housing

Use With
VersaBlade™ Crimp Terminals, 35745 , 35747 , 35746 , 35748 . 35150-0290 TPA™