REV	ECN NO	REVISIONS	DRN	CKD	APP	DATE
A	——	NEW RELEASE	AJF	KLJ	NO	12-20-10

DIALIGHT PART NUMBER	DIM "A"	TERMINAL TYPE	COLLAR & FLANGE NUT FINISH
508-7438-504	.865 [21,74]	FIG. 1	BLACK ANODIZE
508-7438-604	.865 [21,74]	FIG. 1	CLEAR ANODIZE
508-7445-504	.942 [23,92]	FIG. 1	BLACK ANODIZE
508-7445-604	.942 [23,92]	FIG. 1	CLEAR ANODIZE
508-7538-504	.834 [21,18]	FIG. 2	BLACK ANODIZE
508-7538-604	.834 [21,18]	FIG. 2	CLEAR ANODIZE
508-7545-504	.920 [23,37]	FIG. 2	BLACK ANODIZE
508-7545-604	.920 [23,37]	FIG. 2	CLEAR ANODIZE
508-8738-504	.848 [21,54]	FIG. 3	BLACK ANODIZE
508-8738-604	.848 [21,54]	FIG. 3	CLEAR ANODIZE
508-8745-504	.934 [23,72]	FIG. 3	BLACK ANODIZE
508-8745-604	.934 [23,72]	FIG. 3	CLEAR ANODIZE

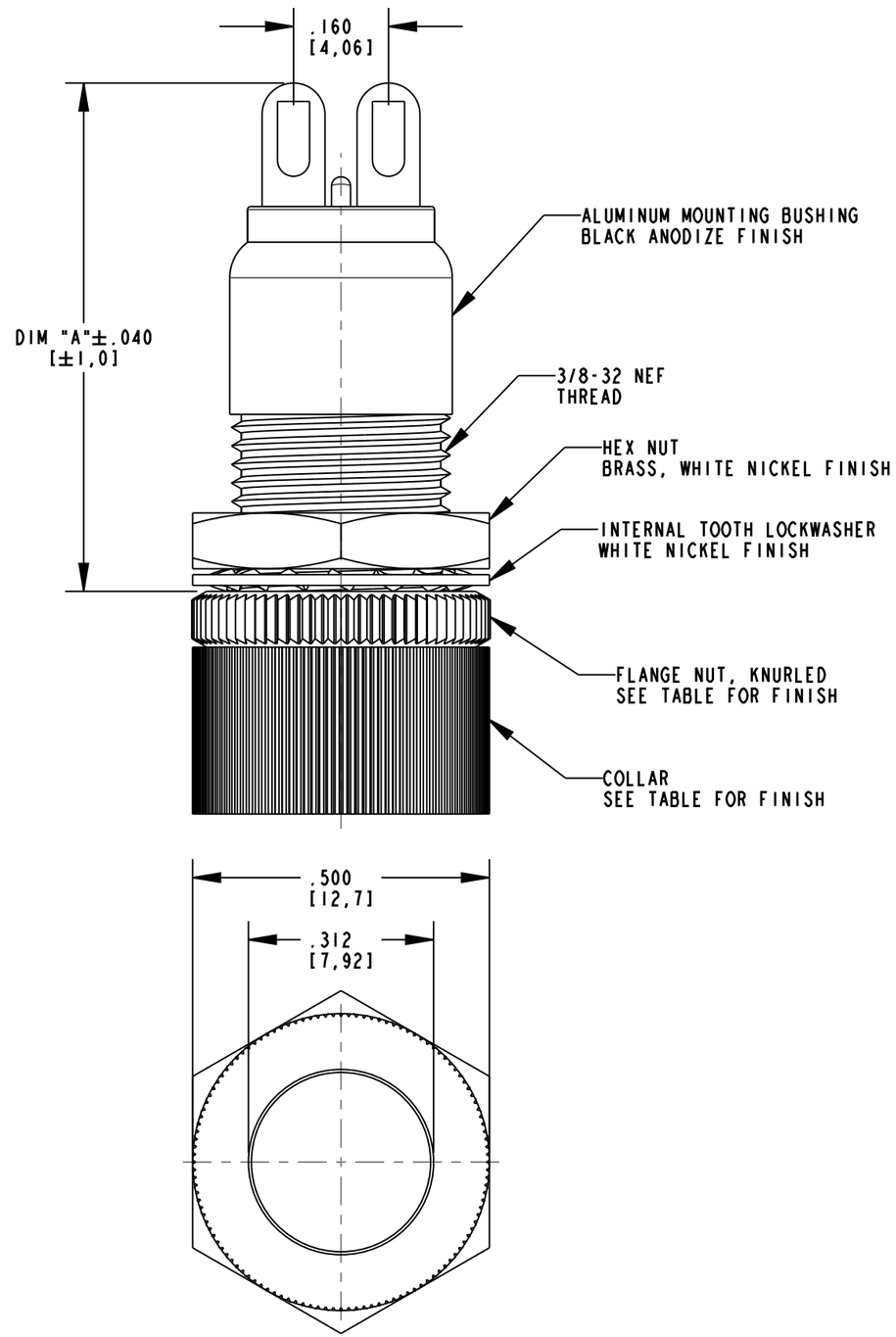

FIG.1 - SOLDER BLADE TERMINALS

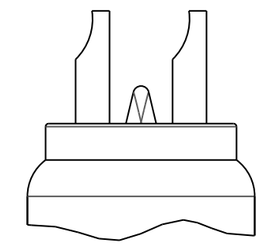

FIG.2 - SOLDER CUP TERMINALS

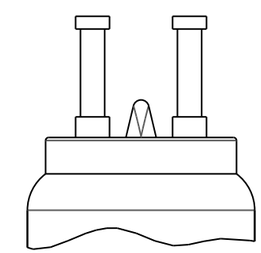

FIG.3 - TURRET TERMINALS

NOTES:

1. DIALIGHT PART NUMBERS: 508-74XX-504, 508-74XX-604, 508-75XX-504, 508-75XX-604, 508-87XX-504 & 508-87XX-604.
2. MAXIMUM PANEL THICKNESS: .156"
3. RECOMMENDED MOUNTING HOLE SIZE: .380±.002".

THIS DRAWING AND THE CONTENTS HEREIN ARE CONFIDENTIAL AND THE SOLE PROPERTY OF DIALIGHT. REPRODUCTION OF THIS DRAWING OR CONSTRUCTION OF ANY PARTS WITHIN THIS DRAWING ARE FORBIDDEN WITHOUT THE WRITTEN CONSENT OF DIALIGHT.

SCALE: 4.000

ALL DIM'S IN: INCHES (MM)

TOLERANCES:
UNLESS OTHERWISE SPECIFIED

FRACTIONS: ±1/64
DECIMALS (.XX): ±.01
DECIMALS (.XXX): ±.005
DECIMALS (.XXXX): ±.0005
ANGLES: ±1°

FINISH:

FSCM 83330

DRAWING NUMBER: C-17895

REV: A

TITLE: 508 SERIES DATALAMP HOLDER

MATERIAL

Dialight

1501 ROUTE 34 SOUTH
FARMINGDALE, NJ 07727

SHEET 1 OF 1

FAMILY TABLE: