GC4902 – GC4946

CONTROL DEVICES – BEAMLEAD PIN DIODES

RoHS Compliant e4 RoHS

DESCRIPTION

Semiconductor mesa beam lead PIN diodes are designed for very low inductance, low resistance and moderately low capacitance with ultra fast switching characteristics. The structural details include thermal oxide junction passivation thus providing reliable operation with stable junction parameters along with ceramic glass, which provides mechanical strength to the diode. These devices are designed with a narrow base width, a high quality intrinsic 'I' layer that provides low loss, high isolation and ultra high speed switching characteristics.

This series of diodes meets RoHS requirements per EU Directive 2002/95/EC. The standard terminal finish is gold unless otherwise specified. Consult the factory if you have special requirements.

APPLICATIONS

These high speed beam lead PIN diodes are designed for stripline and microstrip circuits and are primarily used in shunt/series and conventional series multithrow configurations as switching, attenuating and phase shifting elements with frequencies extending up to Ku band.

KEY FEATURES

- Wide Bandwidth / High Switching Speed
- 5 Gram Typical Pull Strength
- Very Low R_S/C_J (Loss/Isolation) Products with Low Inductance
- High Quality, High Resistivity Epitaxy
- Stable Low Leakage Passivation with Rugged Glass Body
- RoHS Compliant [1]

[1] These devices are supplied with Gold plated terminations. Consult factory for details.

APPLICATIONS/BENEFITS

- High Speed Switching
- Broadband Performance
- Suitable for Applications through 26 Ghz

ABSOLUTE MAXIMUM RATINGS AT 25º C (UNLESS OTHERWISE SPECIFIED)

Rating	Symbol	Value	Unit
Maximum Leakage Current @80% of minimum Rated V_B	I_R	0.5	uA
Operating Temperature	T_{OP}	-65 to +150	ºC
Storage Temperature	T_{STG}	-65 to +150	ºC

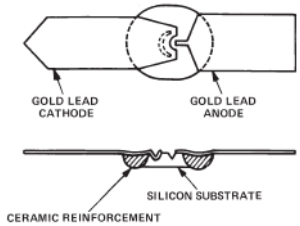

For the most current data, consult MICROSEMI's website: www.MICROSEMI.com
Specifications are subject to change, consult factory for the latest information.

These devices are ESD sensitive and must be handled use using ESD precautions.

www.MICROSEMI.com

Copyright © 2006
Rev: 2009-01-19

Microsemi
Microwave Products
75 Technology Drive, Lowell, MA. 01851, 978-442-5600, Fax: 978-937-3748

ELECTRICAL PARAMETERS @ 25°C (unless otherwise specified)

Model Number	DC Characteristics					RF Characteristics		
	V_b (V) I_R=10µA (Min)	C_T (pF) @10V (Max)	R_s (Ω) I_F=10mA F=2.2GHz (Max)	R_s (Ω) I_F=50mA F=2.2GHz (Max)	T_L(nS) (Typ)	Isol (db)[1] V_r=10V (Typ)	I_L (db)[1] I_F=10mA (Typ)	I_L (db)[1] I_F=50mA (Typ)
GC4902 – 12	100	0.025		3.0	80	29.0		0.26
GC4903 – 12	100	0.030		2.5	80	27.8		0.22
GC4941 – 12	50	0.060	1.5		50	22.0	0.13	
GC4942 – 12	50	0.040	2.0		45	25.0	0.17	
GC4943 – 12	50	0.030	3.0		40	27.5	0.26	
GC4944 – 12	50	0.025	3.5		35	29.0	0.30	
GC4945 – 12	50	0.022	5.5		40	30.5	0.46	
GC4946 – 12	50	0.020	6.5		40	31.0	0.55	

Notes:
1) Insertion loss and Isolation are test at F = 2.2 GHz using transmission loss techniques.

PACKAGE STYLE 12

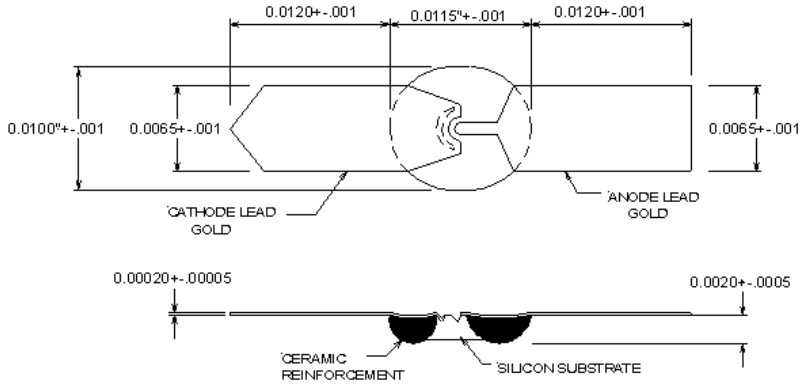

Copyright © 2006
Rev: 2009-01-19

Microsemi
Microwave Products
75 Technology Drive, Lowell, MA. 01851, 978-442-5600, Fax: 978-937-3748