OD180APL Series

DC Fan - 12, 24, 48V
180x65mm (7.1"x 2.6")

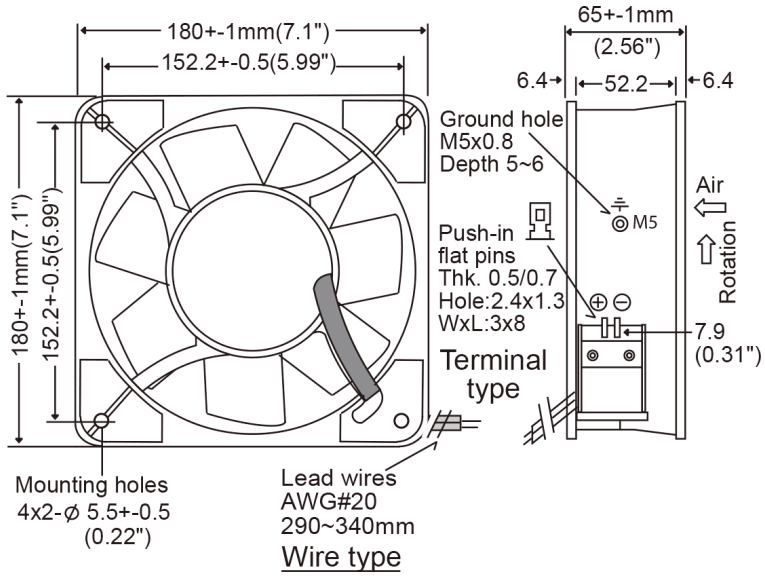

Frame & Impeller	Diecast Aluminum (Frame) PBT, UL94V-0 - (Impeller)
Connection	2x Lead wires 20AWG or ter-minals
Motor	Brushless DC, auto restart, rotor lock & polarity protected
Bearing System	Dual ball bearing
Insulation Resistance	10M ohm between leadwire and frame (500VDC)
Dielectric Strength	1 minute at 500 VAC, max leakage < 500 MicroAmp
Temperature Range	-20C ~ +75C
Storage Temperature	-20 ~ +80C

Available Options:

Alarm
Tachometer
PWM
Thermal Control

Life Expectancy (L10)
60,000 hrs (40C)

Weight: ~3.2 lbs

m0

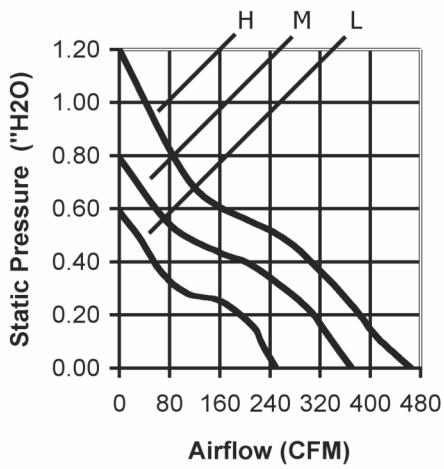

Model Number	Speed (RPM)	Airflow (CFM)	Noise (dB)	Volts DC	Input Power (Watts)	Amps	Max. Static Pressure ("H_2O)
OD180APL-12H*B	3400	460	63	12	50.4	4.20	1.10
OD180APL-12M*B	2800	375	53	12	23	1.90	0.70
OD180APL-12L*B	2200	300	46	12	13.2	1.10	0.58
OD180APL-24H*B	3500	470	65	24	50.4	2.10	1.20
OD180APL-24M*B	2800	375	53	24	24	0.97	0.70
OD180APL-24L*B	2200	300	46	24	13	0.52	0.58
OD180APL-48H*B	3500	470	65	48	49.4	1.03	1.20
OD180APL-48M*B	2800	375	53	48	23.5	0.48	0.70
OD180APL-48L*B	2200	300	46	48	14.5	0.30	0.58

* Insert letter "T" to indicate terminal=type.

Knight Electronics, Inc.
10557 Metric Drive
Dallas, Texas 75243
214-340-0265

RoHS Compliant

Orion Fans
Information and data is subject to change without prior notification.