MICRO SWITCH
A DIVISION OF MINNEAPOLIS-HONEYWELL REGULATOR COMPANY
FREEPORT, ILLINOIS
FED. MFR. CODE 91929

ACTUATOR—SWITCH

CATALOG LISTING
JE—6

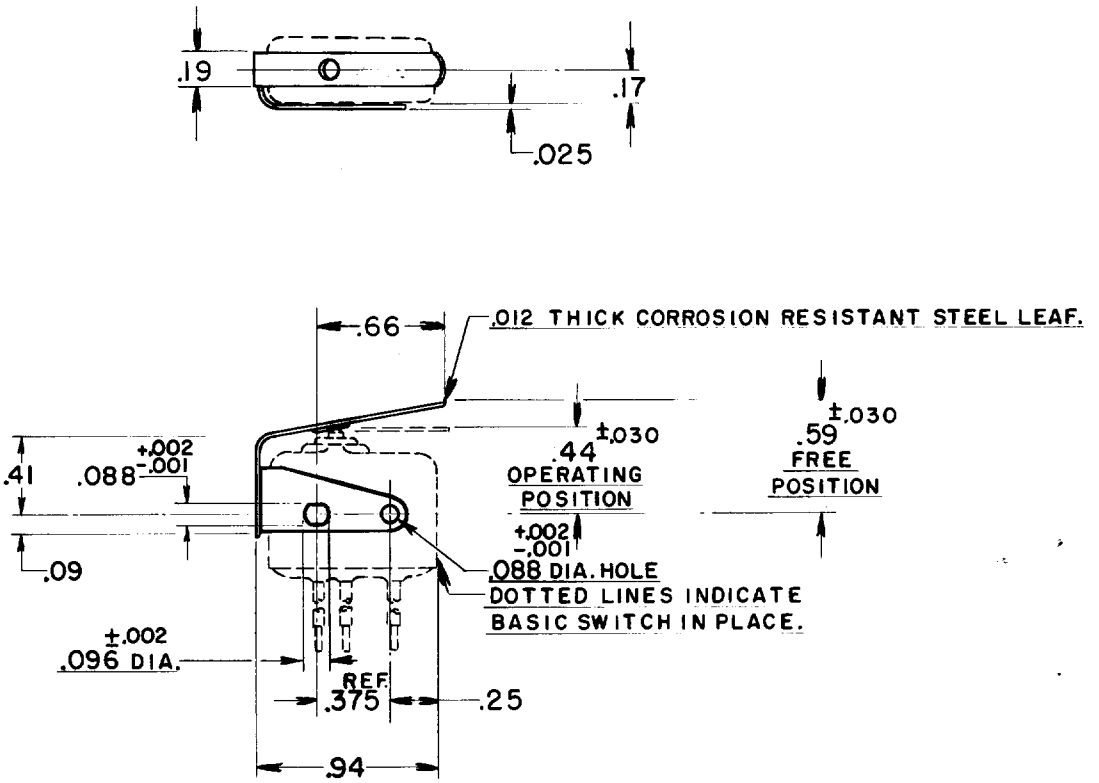

THIS DRAWING COVERS A PROPRIETARY ITEM AND IS THE PROPERTY OF MICRO SWITCH, A DIVISION OF HONEYWELL. THIS DRAWING IS NOT TO BE COPIED OR USED WITHOUT THE APPROVAL OF MICRO SWITCH.

CHARACTERISTICS WITH ISE1 BASIC SWITCH INSTALLED	ELECTRICAL DATA		SCALE FULL
OPERATING FORCE — — — — — — 12 OZ. MAX.	CONTACT ARRANGEMENT	BREAK DISTANCE	DO NOT SCALE PRINT
RELEASE FORCE — — — — — — — 2 OZ. MIN.			UNLESS OTHERWISE SPECIFIED DIMENSIONS ARE IN INCHES
DIFFERENTIAL TRAVEL — — — — .025 MAX.			TOLERANCES ARE:
OVERTRAVEL — — — — — — — — .015 MIN.			ONE PLACE (.0) ±.030 TWO PLACE (.00) ±.015 THREE PLACE (.000) ±.005 ANGLES ±
			WEIGHT

SKETCH 16061 ISSUE 1
REPLACES
RELEASE NO. SR 7022
DRAWING NUMBER JE-6
ISSUE 1

DRAWN	R.E.R.	7 OCT. '57
CHECK	GCH	10 OCT. '57
CHECK	CNT	9 OCT. '57
CHECK	BLS	9 OCT. '57

REVISIONS

FO-50378