390-001
Submersible EMI/RFI Cable Sealing Backshell
with Strain Relief
Type A - Rotatable Coupling - Low Profile

CONNECTOR DESIGNATORS

A-F-H-L-S

ROTATABLE COUPLING

TYPE A OVERALL SHIELD TERMINATION

390 F S 001 M 16 10 M 6

- Product Series
- Connector Designator
- Angle and Profile
  - A = 90°
  - B = 45°
  - S = Straight
- Basic Part No.
- A Thread (Table I)
- Finish (Table II)
- Shell Size (Table I)
- Cable Entry (Tables X, XI)
- Strain Relief Style (H, A, M, D)
- Length: S only (1/2 inch increments: e.g. 6 = 3 inches)

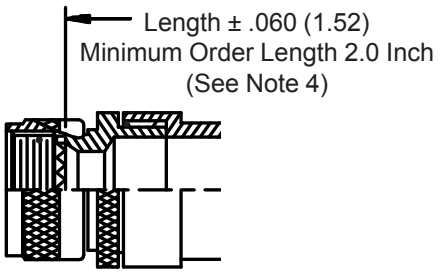

STYLE 2 (STRAIGHT See Note 1)

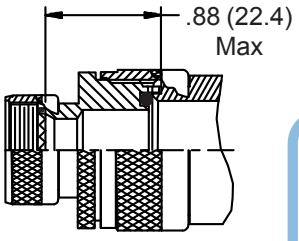

STYLE 2 (45° & 90° See Note 1)

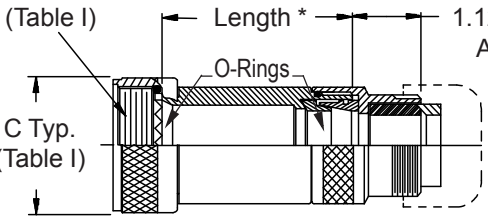

* Length ± .060 (1.52) Minimum Order Length 1.5 Inch (See Note 4)

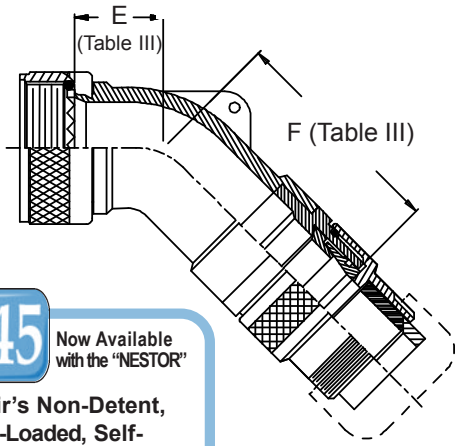

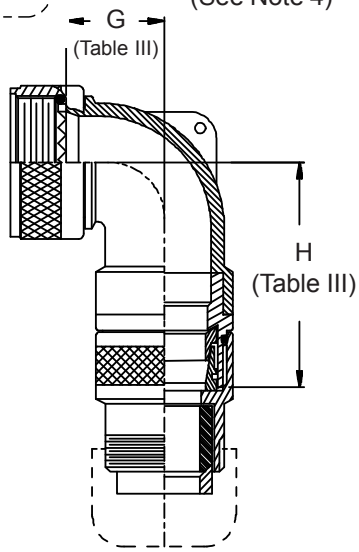

-445 Now Available with the "NESTOR"

Glenair's Non-Detent, Spring-Loaded, Self-Locking Coupling.

Add "-445" to Specify This AS85049 Style "N" Coupling Interface.

STYLE H
Heavy Duty
(Table X)

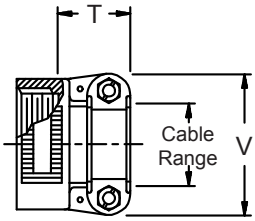

STYLE A
Medium Duty
(Table XI)

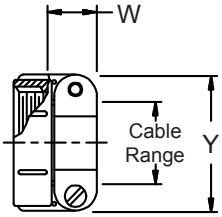

STYLE M
Medium Duty
(Table XI)

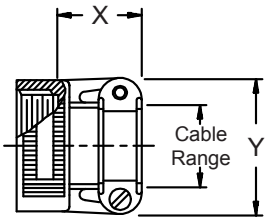

STYLE D
Medium Duty
(Table XI)

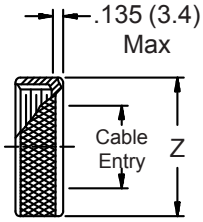

© 2005 Glenair, Inc. CAGE Code 06324 Printed in U.S.A.

390-001
Submersible EMI/RFI Cable Sealing Backshell
with Strain Relief
Type A - Rotatable Coupling - Low Profile

Glenair®

TABLE III: ELBOW DIMENSIONS

Shell Size Conn. Desig. A-F-L-S	H	E Max		F Max		G Max		H Max	
08	09	.457	(11.6)	1.760	(44.7)	.500	(12.7)	1.880	(47.8)
10	11	.520	(13.2)	1.920	(48.8)	.595	(15.1)	1.990	(50.5)
12	13	.582	(14.8)	1.990	(50.5)	.610	(15.5)	2.020	(51.3)
14	15	.645	(16.4)	2.144	(54.5)	.700	(17.8)	2.154	(54.7)
16	17	.738	(18.7)	2.254	(57.3)	.885	(22.5)	2.244	(57.0)
18	19	.926	(23.5)	2.444	(62.1)	.975	(24.8)	2.414	(61.3)
20	21	.926	(23.5)	2.444	(62.1)	.975	(24.8)	2.414	(61.3)
22	23	1.020	(25.9)	2.657	(67.5)	1.125	(28.6)	2.587	(65.7)
24	25	1.020	(25.9)	2.657	(67.5)	1.125	(28.6)	2.587	(65.7)
28		1.145	(29.1)	2.690	(68.3)	1.225	(31.1)	2.740	(69.6)
32		1.207	(30.7)	2.790	(70.9)	1.575	(40.0)	2.990	(75.9)
36		1.238	(31.4)	2.930	(74.4)	1.775	(45.1)	3.040	(77.2)

1. When maximum cable entry (page 21) is exceeded, Style 2 will be supplied. Dimensions E, F, G and H will not apply. Please consult factory.
2. Metric dimensions (mm) are indicated in parentheses.
3. Cable range is defined as the accommodations range for the wire bundle or cable. Dimensions shown are not intended for inspection criteria.
4. Consult factory for shorter lengths on straight backshells.
5. Interface O-Ring not supplied with connector designator A.

TABLE X: CABLE ENTRY

Dash No.	T Max		V Max		Cable Range Min		Cable Range Max	
04	.780	(19.8)	.957	(24.3)	.125	(3.2)	.312	(7.9)
06	.780	(19.8)	1.145	(29.1)	.250	(6.4)	.437	(11.1)
08	.780	(19.8)	1.332	(33.8)	.387	(9.8)	.562	(14.3)
10	.780	(19.8)	1.332	(33.8)	.350	(8.9)	.625	(15.9)
12	.811	(20.6)	1.551	(39.4)	.500	(12.7)	.750	(19.1)
16	.905	(23.0)	1.770	(45.0)	.625	(15.9)	.937	(23.8)
20	1.092	(27.7)	2.113	(53.7)	.875	(22.2)	1.250	(31.8)
24	1.124	(28.5)	2.363	(60.0)	1.000	(25.4)	1.375	(34.9)
28	1.399	(35.5)	2.770	(70.4)	1.250	(31.8)	1.625	(41.3)
32	1.399	(35.5)	3.020	(76.7)	1.437	(36.5)	1.875	(47.6)

See inside back cover fold-out or pages 13 and 14 for Tables I and II.

TABLE XI: CABLE ENTRY

Dash No.	W Max		X Max		Y Max		Z Max		Cable Range Min **		Cable Range Max	
03*	.437	(11.1)	.760	(19.3)	.843	(21.4)	.630	(16.0)	.156	(4.0)	.250	(6.4)
04*	.437	(11.1)	.760	(19.3)	.906	(23.0)	.755	(19.2)	.188	(4.8)	.312	(7.9)
06*	.500	(12.7)	.760	(19.3)	1.093	(27.8)	.942	(23.9)	.281	(7.1)	.438	(11.1)
08	.563	(14.3)	.760	(19.3)	1.187	(30.1)	1.067	(27.1)	.387	(9.8)	.562	(14.3)
10	.563	(14.3)	.760	(19.3)	1.281	(32.5)	1.192	(30.3)	.375	(9.5)	.625	(15.9)
12	.563	(14.3)	.760	(19.3)	1.500	(38.1)	1.380	(35.1)	.438	(11.1)	.750	(19.1)
16	.656	(16.7)	1.073	(27.3)	1.719	(43.7)	1.535	(39.0)	.625	(15.9)	.938	(23.8)
20	.656	(16.7)	1.323	(33.6)	2.062	(52.4)	1.848	(46.9)	.875	(22.2)	1.250	(31.8)
24	.656	(16.7)	1.323	(33.6)	2.312	(58.7)	2.255	(57.3)	1.000	(25.4)	1.375	(34.9)
28	1.188	(30.2)	1.572	(39.9)	2.719	(69.1)	2.505	(63.6)	1.250	(31.8)	1.625	(41.3)
32*	1.187	(30.1)	1.572	(39.9)	2.969	(75.4)	2.755	(70.0)	1.437	(36.5)	1.875	(47.6)
40*	1.125	(28.6)	1.572	(39.9)	3.531	(89.7)	3.255	(82.7)	1.875	(47.6)	2.375	(60.3)

* Not available in Style M clamp.

** Not Applicable Style D

© 2005 Glenair, Inc.