Datasheet SDP3x-Analog

Differential Pressure Sensor with Analog Output

- Smallest size enables portable applications
- Reflow solderable – Pick & Place
- Configurable analog output
- Calibrated and temperature compensated
- Excellent repeatability, no drift

Product Summary

The SDP3x sensor family is Sensirion's series of small differential pressure sensors designed for high-volume applications where size is a key requirement. It builds on the next generation CMOSens® sensor chip that is at the heart of Sensirion's new differential pressure and flow sensing platform.
The analog SDP3x sensors offer a calibrated and temperature compensated analog voltage output. The output signal is configurable: different measurement speeds, output curves and temperature compensations can be selected – even dynamically during operation mode.

Benefits of Sensirion's CMOSens® Technology

- High reliability and long-term stability
- Best signal to noise ratio
- Industry-proven technology with a track record of more than 15 years
- Designed for mass production
- High process capability

Content

1. Sensor Performance 2
2. Specifications 3
3. Pin Assignment 4
4. Package Outline 6
5. Soldering 7
6. Shipping Package 8
7. Ordering Information 8
Revision History 8
Important Notices 9
Headquarters and Subsidiaries 9

1. Sensor Performance

1.1 Differential Pressure Specification[1]

Parameter	Configuration	SDP36	SDP37
Measurement range [2]	Linear	- 50 to 500 Pa (-0.2 to 2 inH_2O)	- 12.5 to 125 Pa (-0.05 to 0.5 inH_2O)
	Square Root	- 500 to 500 Pa (- 2 to 2 inH_2O)	- 125 to 125 Pa (- 0.5 to 0.5 inH_2O)
Zero point accuracy [3,4,5]		0.1 Pa [5]	0.08 Pa [5]
Span accuracy [3,4,5]		3% of reading [5]	3% of reading [5]
Zero point repeatability [4,5]		0.03 Pa [5]	0.025 Pa [5]
Span repeatability [4,5]		0.5% of reading [5]	0.5% of reading [5]
Span shift due to temperature variation		< 0.5% of reading per 10°C	< 0.5% of reading per 10°C
Offset stability		< 0.01 Pa/year	< 0.01 Pa/year
Response time (τ_{63})	Slow	< 9 ms	
	Fast	< 5 ms	
Internal digital resolution		16 bit	
Calibrated for		Air, N_2	
Media compatibility		Air, N_2, O_2, non-condensing	
Calibrated temperature range		-40 °C to +85 °C	

[1] Unless otherwise noted, all sensor specifications are valid at 25°C with VDD = 3.3 V and absolute pressure = 966 mbar.

[2] For other pressure ranges contact Sensirion

[3] Includes repeatability

[4] Total accuracy/repeatability is a sum of zero-point and span accuracy/repeatability.

[5] Output voltage integral non linearity and output voltage noise are not included and defined later in chapter 2.1. Note that the effect of output voltage integral non linearity and output voltage noise on accuracy is highly dependent on the output configuration (linear or square root).

2. Specifications

2.1 Electrical Specifications

Parameter	Symbol	Condition	Min.	Typ.	Max.	Units	Comments
Supply							
Supply Voltage	V_{DD}		2.7	3.3	5.5	V	
Power-up/down level	V_{POR}		2.3	2.5	2.7	V	
Supply current	I_{DD}			3.8	5.5	mA	
Ratiometric analog voltage output							
Output range			10%		90%	V_{DD}	
Resistive load to GND			10 [1]	100		kOhm	
Resistive load to VDD			1000			kOhm	
Capacitive load	C_{load}				100	nF	
Output voltage Integral Non Linearity (INL)					5	mV	
Output voltage noise (RMS)				0.5		mV	

2.2 Timing Specifications

Parameter	Symbol	Condition	Min.	Typ.	Max.	Units	Comments
Power-up time	t_{PU}				25	ms	Time to first reliable measurement

2.3 Mechanical Specifications

Parameter	Symbol	Condition	Min.	Typ.	Max.	Units	Comments
Allowable overpressure[2]	P_{max}			1		bar	
Rated burst pressure	P_{burst}		3			bar	
Weight	W				0.2	g	

2.4 Materials

Parameter	
Wetted materials	glass (silicon nitride, silicon oxide), LCP, green epoxy-based mold compound, epoxy-based resins
REACH, RoHS	REACH and RoHS compliant

2.5 Absolute Maximum Ratings

Parameter	Rating	Units
Supply Voltage V_{DD}	-0.3 to 5.5	V
Max Voltage on pins (Inputs)	-0.3 to V_{DD}+0.3	V
Input current on any pin	±70	mA
Operating temperature range[3]	-40 to +85	°C
Storage temperature range[4]	-40 to +85	°C
Max. humidity for long term exposure	40°C dew point	
ESD HBM (human body model)	2	kV

[1] For a resistive load to GND less than 100kOhm a 1nF capacitor to GND on the AOUT is recommended

[2] Allowable overpressure during operation. Refer to the SDP selection guide for pressure dependency of the measured signal. Fast absolute pressure changes on both ports can result in dynamic effects on the sensor signal. For higher overpressures or continuous high overpressures contact Sensirion.

[3] For Air and N_2. Long term exposure to high temperatures and (high concentrations of) O_2 can reduce the product lifetime

[4] For long term storage in Tape and Reel refer to the SDP3x handling instructions

3. Pin Assignment

The SDP3x consists of a QFN package with a plastic cap covering the top and providing the pneumatic connections to the sensor. Table 1 shows the pin assignments of the SDP3x-Analog sensor.

Pin no.	Name	Description
1	GND	Connect to ground
2	GND	Connect to ground
3	GND	Connect to ground
4	BWS	Bandwidth selection input
5	TCS	Temperature compensation selection input
6	GND	Connect to ground
7	VDD	VDD Supply
8	OCS	Output curve selection input
9	AOut	Ratiometric analog voltage output
10	GND	Connect to ground
11	GND	Connect to ground
12-16	-	Reserved. Do not connect

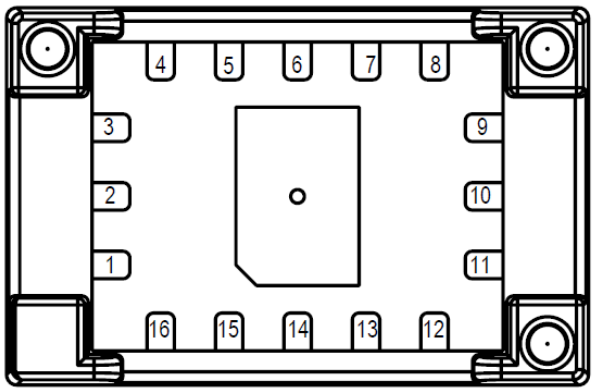

Table 1: *SDP3x-Analog pin assignment (bottom view).*

3.1 Power Pins (VDD, GND)

The power supply pins must be decoupled with a 100 nF capacitor that shall be placed as close to the sensor as possible.

3.2 OCS: Output Curve Selection Input

Config.	Polarity	Description	Conversion to physical values AOut[V], VDD[V], Differential Pressure (DP) [Pa]	
Linear	Low (GND)	Analog output is configured as a linear output. The sensor is not fully bi-directional in this configuration: -10% full-scale to 100% full scale. 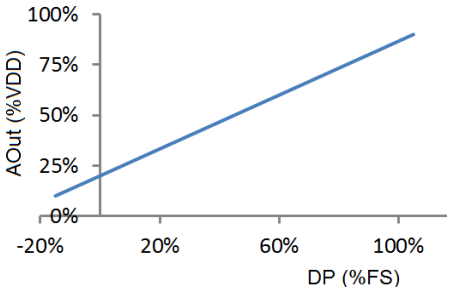	SDP36 (500Pa)	$DP = \frac{750 \cdot AOut}{VDD} - 150$
			SDP37 (125Pa)	$DP = \frac{190 \cdot AOut}{VDD} - 38$
Square Root	High (VDD)	Analog output is a fully bi-directional output with square root conversion. The benefits are that the bidirectional output has a more stable zero point and higher sensitivity at lower pressures 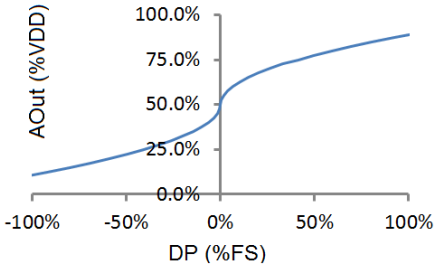	SDP36 (500Pa)	$DP = sign\left(\frac{AOut}{VDD} - 0.5\right) \cdot \left(\frac{AOut}{VDD \cdot 0.4} - 1.25\right)^2 \cdot 525$
			SDP37 (125Pa)	$DP = sign\left(\frac{AOut}{VDD} - 0.5\right) \cdot \left(\frac{AOut}{VDD \cdot 0.4} - 1.25\right)^2 \cdot 133$

3.3 TCS: Temperature Compensation Selection Input

Configuration	Polarity	Description
Temperature compensation for mass flow	Low (GND)	In this configuration temperature compensation is optimized for applications where mass flow measurements in bypass are performed
Temperature compensation for differential pressure	High (VDD)	In this configuration the analog output signal is temperature compensated for differential pressure. This configuration is recommended for applications where real differential pressure measurements are required.

For more information about temperature compensation for differential pressure sensors, for example volume flow measurements in bypass, refer to the selection guide in the differential pressure download center on our website.

3.4 BWS: Bandwidth Selection Input

Configuration	Polarity	Description
Fast	Low (GND)	In this configuration the chip will output the differential pressure value on the analog output with the highest possible bandwidth and lowest latency. This configuration is recommended to be used in use cases where small changes need to be detected as quickly as possible. The response time in this configuration is less than 5ms
Slow	High (VDD)	In this configuration extra averaging is in place in order to achieve an excellent signal to noise ratio. The response time in this configuration is less than 9ms

3.5 AOut Pin

The AOut pin gives out an analog ratiometric voltage, representing the measured differential pressure value. Please note the resistive and capacitive loads as mentioned in section 2.1.
Formulas for converting AOut [V] to differential pressure [Pa] can be found in section 3.2.

3.6 Die Pad (Center Pad)

The die pad or center pad is visible from below and located in the center of the package. It is internally connected to GND and therefore there are no electrical constraints on connecting or not connecting the die pad to GND. For mechanical stability it is recommended to solder the center pad to the PCB.
The hole in the middle of the die pad must stay open during and after soldering.

4. Package Outline

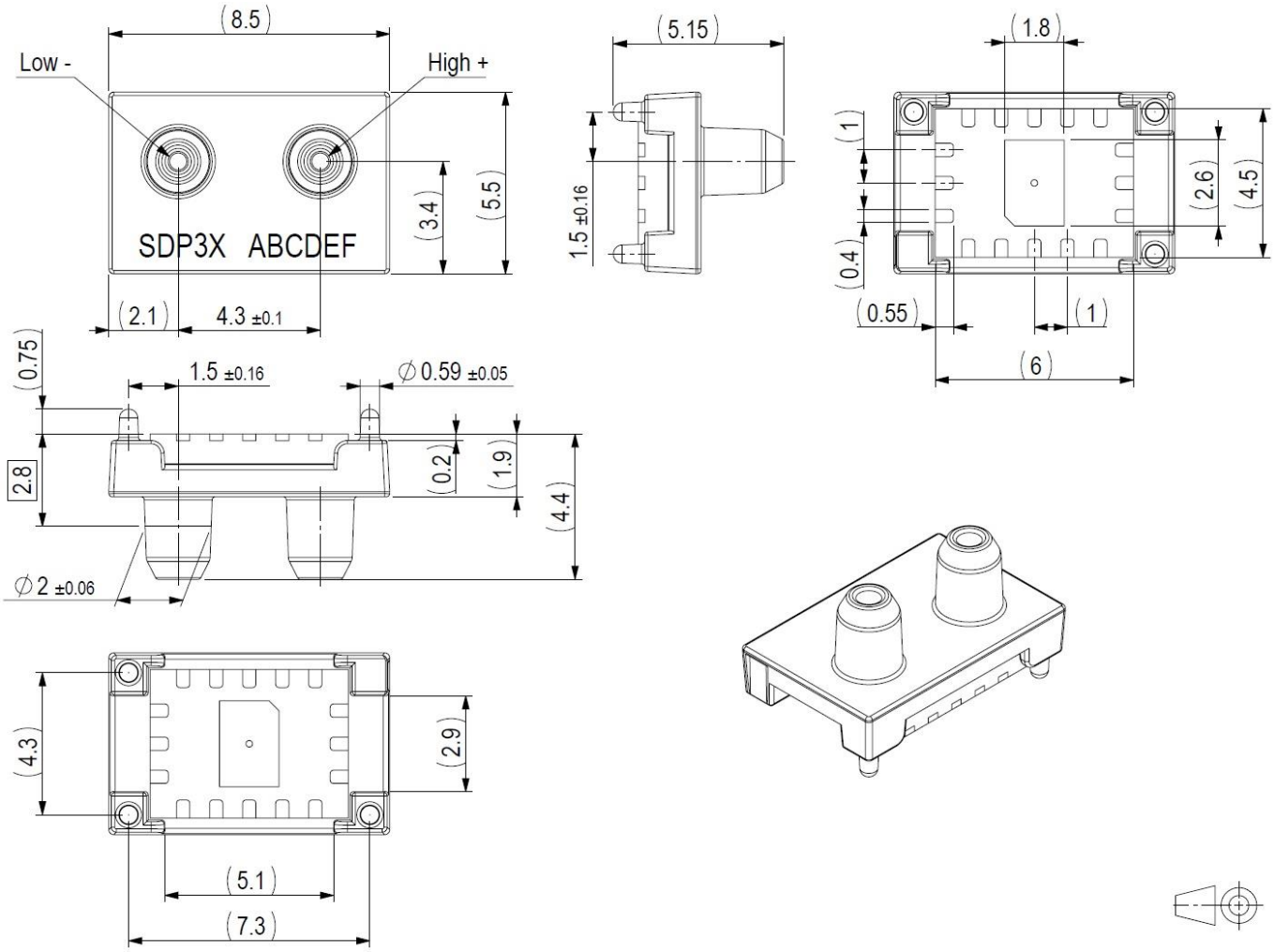

Figure 1: *SDP3x. All dimensions in mm.*

5. Soldering

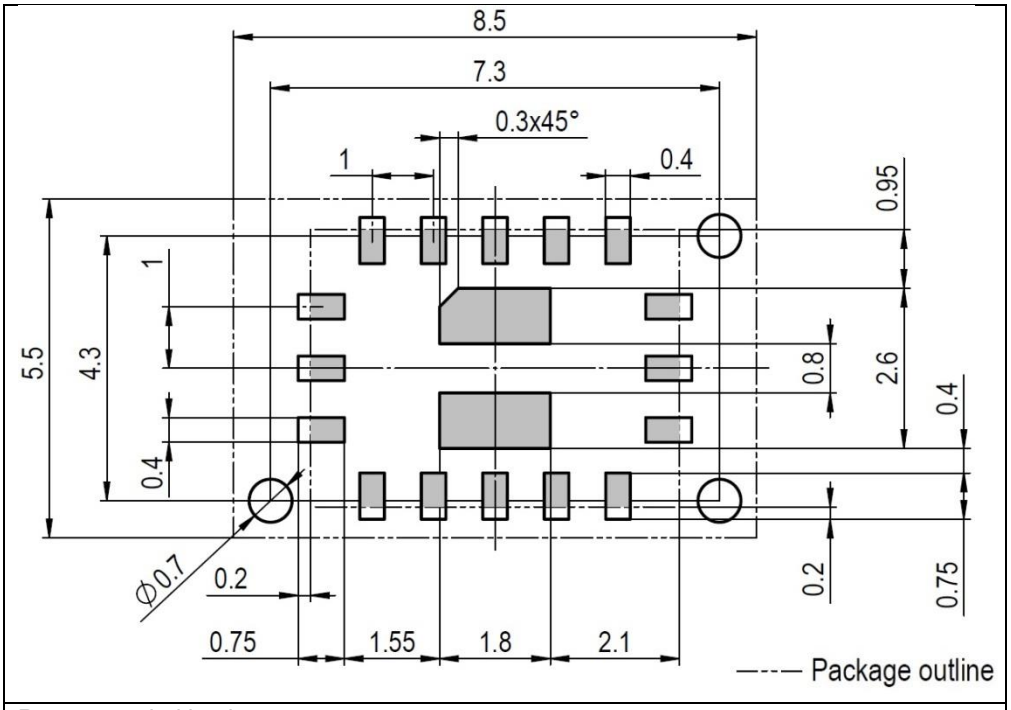

Recommended land pattern

The solder mask is understood to be the insulating layer on top of the PCB covering the copper traces. It is recommended to design the land pattern as a Non- Solder Mask Defined (NSMD) type.

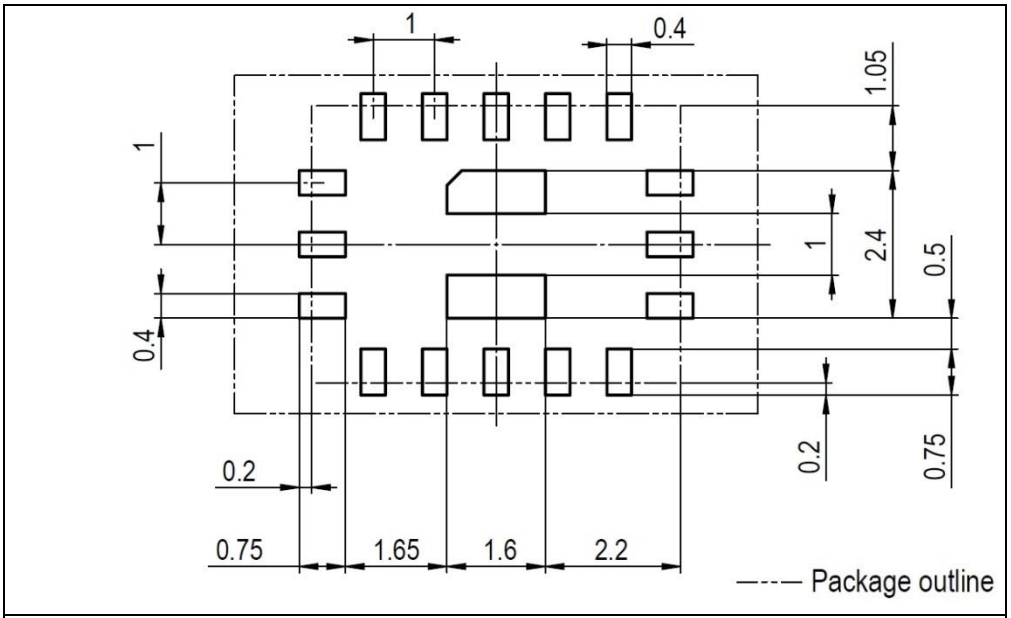

Recommended stencil aperture

The sensor must enter the reflow process only once and with a minimal temperature and exposure time. When both sides of the PCB are reflow soldered or multiple reflow runs are required, the sensor must be soldered in the last soldering run. In any case the temperature should not exceed 260°C; temperatures above 200°C should be limited in time to a maximum of 150 seconds.

Ensure that the ports of the sensor are well protected during assembly and soldering so that no dust, solder flux or other liquids can enter the flow channel. In no case, a board wash shall be applied. It is strongly recommended to use “no-clean” solder paste.

It is important to note that the diced edge or side faces of the I/O pads may oxidize over time, therefore a solder fillet may or may not form. Hence there is no guarantee for solder joint fillet heights of any kind.

Refer to the SDP3x handling instructions on our website for more details.

6. Shipping Package

SDP3x are provided in tape & reel shipment packaging. Standard packaging size is 1500 or 250 units per reel. The drawing of the packaging tapes with sensor orientation is shown in *Figure* 2.

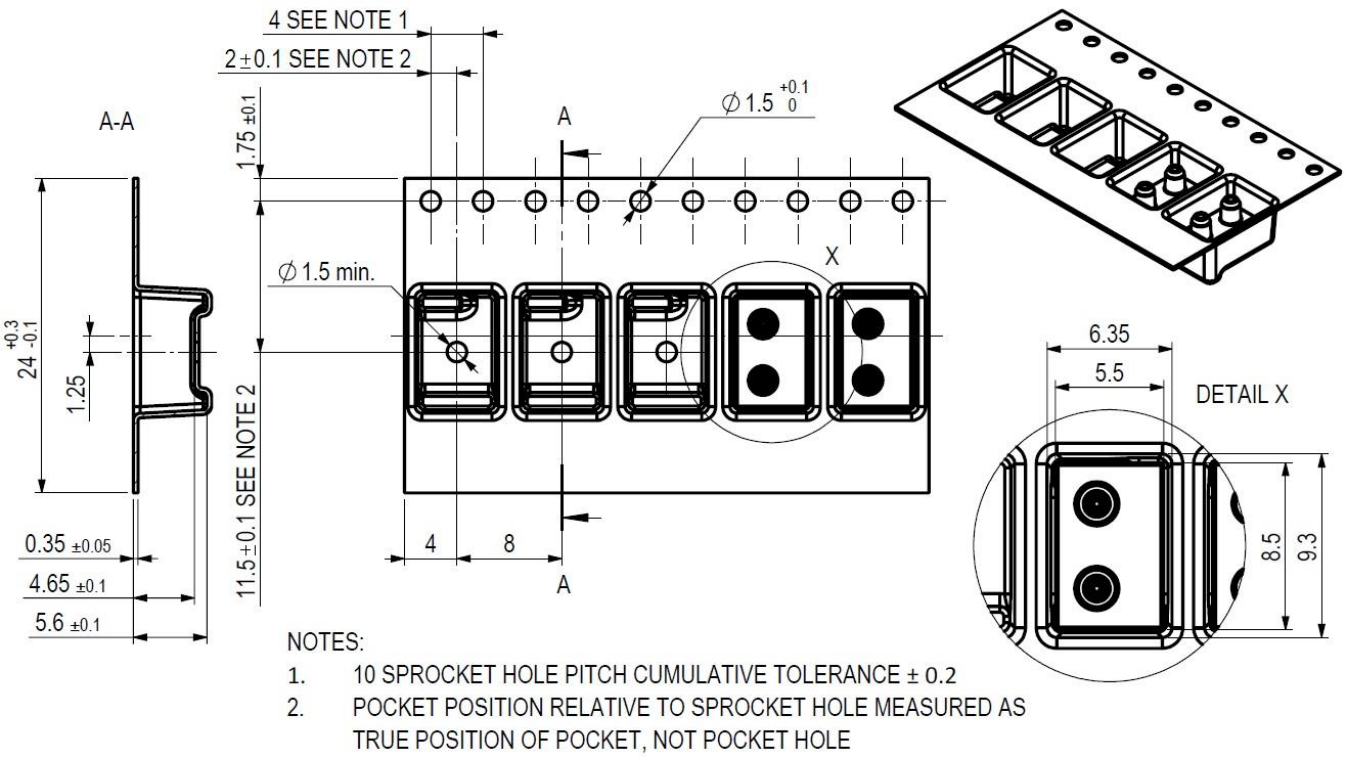

Figure 2: *Packaging tape and sensor orientation. Header tape is to the right and trailer tape to the left on this drawing*

7. Ordering Information

Use the part names and product numbers shown in the following table when ordering SDP3x differential pressure sensor. For the latest product information and local distributors, visit www.sensirion.com.

Part name	Description / Output	Product number	Packaging	Tape & Reel size
SDP36	Analog, 500Pa	1-101471-02	Tape & Reel (QFN Quad 2 configuration)	1500
		1-101571-02	Tape & Reel (QFN Quad 2 configuration)	250
SDP37	Analog, 125Pa	1-101497-02	Tape & Reel (QFN Quad 2 configuration)	1500
		1-101572-02	Tape & Reel (QFN Quad 2 configuration)	250

Revision History

Date	Author	Version	Changes
14.12.2017	ANB	V1	Released. Chip revision update. Product numbers updated. Voltage range extended. Operating temperature extended. TCS now available.

Important Notices

Warning, personal injury

Do not use this product as safety or emergency stop devices or in any other application where failure of the product could result in personal injury (including death). Do not use this product for applications other than its intended and authorized use. Before installing, handling, using or servicing this product, please consult the datasheet and application notes. Failure to comply with these instructions could result in death or serious injury.

If the Buyer shall purchase or use SENSIRION products for any unintended or unauthorized application, Buyer shall defend, indemnify and hold harmless SENSIRION and its officers, employees, subsidiaries, affiliates and distributors against all claims, costs, damages and expenses, and reasonable attorney fees arising out of, directly or indirectly, any claim of personal injury or death associated with such unintended or unauthorized use, even if SENSIRION shall be allegedly negligent with respect to the design or the manufacture of the product.

ESD Precautions

The inherent design of this component causes it to be sensitive to electrostatic discharge (ESD). To prevent ESD-induced damage and/or degradation, take customary and statutory ESD precautions when handling this product.

See application note "Handling Instructions" for more information.

Warranty

SENSIRION warrants solely to the original purchaser of this product for a period of 12 months (one year) from the date of delivery that this product shall be of the quality, material and workmanship defined in SENSIRION's published specifications of the product. Within such period, if proven to be defective, SENSIRION shall repair and/or replace this product, in SENSIRION's discretion, free of charge to the Buyer, provided that:

- notice in writing describing the defects shall be given to SENSIRION within fourteen (14) days after their appearance;
- such defects shall be found, to SENSIRION's reasonable satisfaction, to have arisen from SENSIRION's faulty design, material, or workmanship;
- the defective product shall be returned to SENSIRION's factory at the Buyer's expense; and
- the warranty period for any repaired or replaced product shall be limited to the unexpired portion of the original period.

This warranty does not apply to any equipment which has not been installed and used within the specifications recommended by SENSIRION for the intended and proper use of the equipment. EXCEPT FOR THE WARRANTIES EXPRESSLY SET FORTH HEREIN, SENSIRION MAKES NO WARRANTIES, EITHER EXPRESS OR IMPLIED, WITH RESPECT TO THE PRODUCT. ANY AND ALL WARRANTIES, INCLUDING WITHOUT LIMITATION, WARRANTIES OF MERCHANTABILITY OR FITNESS FOR A PARTICULAR PURPOSE, ARE EXPRESSLY EXCLUDED AND DECLINED.

SENSIRION is only liable for defects of this product arising under the conditions of operation provided for in the datasheet and proper use of the goods. SENSIRION explicitly disclaims all warranties, express or implied, for any period during which the goods are operated or stored not in accordance with the technical specifications.

SENSIRION does not assume any liability arising out of any application or use of any product or circuit and specifically disclaims any and all liability, including without limitation consequential or incidental damages. All operating parameters, including without limitation recommended parameters, must be validated for each customer's applications by customer's technical experts. Recommended parameters can and do vary in different applications.

SENSIRION reserves the right, without further notice, (i) to change the product specifications and/or the information in this document and (ii) to improve reliability, functions and design of this product.

Copyright © 2016-2017, SENSIRION.
CMOSens® is a trademark of Sensirion
All rights reserved

Headquarters and Subsidiaries

Sensirion AG
Laubisruetistr. 50
CH-8712 Staefa ZH
Switzerland

phone: +41 44 306 40 00
fax: +41 44 306 40 30
info@sensirion.com
www.sensirion.com

Sensirion Taiwan Co. Ltd
phone: +886 3 5506701
info@sensirion.com
www.sensirion.com

Sensirion Inc., USA
phone: +1 312 690 5858
info-us@sensirion.com
www.sensirion.com

Sensirion Japan Co. Ltd.
phone: +81 3 3444 4940
info-jp@sensirion.com
www.sensirion.co.jp

Sensirion Korea Co. Ltd.
phone: +82 31 337 7700~3
info-kr@sensirion.com
www.sensirion.co.kr

Sensirion China Co. Ltd.
phone: +86 755 8252 1501
info-cn@sensirion.com
www.sensirion.com.cn

To find your local representative, please visit www.sensirion.com/distributors