STM32F031x4 STM32F031x6

ARM®-based 32-bit MCU with up to 32 Kbyte Flash, 9 timers, ADC and communication interfaces, 2.0 - 3.6 V

Datasheet - production data

Features

- Core: ARM® 32-bit Cortex®-M0 CPU, frequency up to 48 MHz
- Memories
  - 16 to 32 Kbytes of Flash memory
  - 4 Kbytes of SRAM with HW parity
- CRC calculation unit
- Reset and power management
  - Digital and I/Os supply: 2.0 to 3.6 V
  - Analog supply: V_{DDA} = from V_{DD} to 3.6 V
  - Power-on/Power-down reset (POR/PDR)
  - Programmable voltage detector (PVD)
  - Low power modes: Sleep, Stop and Standby
  - V_{BAT} supply for RTC and backup registers
- Clock management
  - 4 to 32 MHz crystal oscillator
  - 32 kHz oscillator for RTC with calibration
  - Internal 8 MHz RC with x6 PLL option
  - Internal 40 kHz RC oscillator
- Up to 39 fast I/Os
  - All mappable on external interrupt vectors
  - Up to 26 I/Os with 5 V tolerant capability
- 5-channel DMA controller
- 1 × 12-bit, 1.0 µs ADC (up to 10 channels)
  - Conversion range: 0 to 3.6V
  - Separate analog supply from 2.4 up to 3.6 V
- Up to 9 timers
  - 1 x 16-bit 7-channel advanced-control timer for 6 channels PWM output, with deadtime generation and emergency stop
  - 1 x 32-bit and 1 x 16-bit timer, with up to 4 IC/OC, usable for IR control decoding
  - 1 x 16-bit timer, with 2 IC/OC, 1 OCN, deadtime generation and emergency stop
  - 1 x 16-bit timer, with IC/OC and OCN, deadtime generation, emergency stop and modulator gate for IR control
  - 1 x 16-bit timer with 1 IC/OC
  - Independent and system watchdog timers
  - SysTick timer: 24-bit downcounter
- Calendar RTC with alarm and periodic wakeup from Stop/Standby
- Communication interfaces
  - 1 x I^2C interface, supporting Fast Mode Plus (1 Mbit/s) with 20 mA current sink, SMBus/PMBus, and wakeup from Stop mode
  - 1 x USART supporting master synchronous SPI and modem control, ISO7816 interface, LIN, IrDA capability, auto baud rate detection and wakeup feature
  - 1 x SPI (18 Mbit/s) with 4 to 16 programmable bit frames, with I^2S interface multiplexed
- Serial wire debug (SWD)
- 96-bit unique ID
- Extended temperature range: -40 to +105°C
- All packages ECOPACK®2

LQFP32 7x7 mm LQFP48 7x7 mm	UFQFPN32 5x5 mm UFQFPN28 4x4 mm	WLCSP25 2.1x2.1 mm	TSSOP20 6.5x4.4 mm

Table 1. Device summary

Reference	Part number
STM32F031x6	STM32F031C6, STM32F031E6, STM32F031F6, STM32F031G6, STM32F031K6
STM32F031x4	STM32F031C4, STM32F031F4, STM32F031G4, STM32F031K4

This is information on a product in full production. www.st.com

Contents

1 Introduction 8

2 Description 9

3 Functional overview 11

3.1 ARM®-Cortex®-M0 core 11

3.2 Memories 11

3.3 Boot modes 11

3.4 Cyclic redundancy check calculation unit (CRC) 12

3.5 Power management 12

3.5.1 Power supply schemes 12

3.5.2 Power supply supervisors 12

3.5.3 Voltage regulator 12

3.5.4 Low-power modes 13

3.6 Clocks and startup 13

3.7 General-purpose inputs/outputs (GPIOs) 14

3.8 Direct memory access controller (DMA) 15

3.9 Interrupts and events 15

3.9.1 Nested vectored interrupt controller (NVIC) 15

3.9.2 Extended interrupt/event controller (EXTI) 15

3.10 Analog-to-digital converter (ADC) 15

3.10.1 Temperature sensor 16

3.10.2 Internal voltage reference (V_{REFINT}) 16

3.10.3 V_{BAT} battery voltage monitoring 16

3.11 Timers and watchdogs 17

3.11.1 Advanced-control timer (TIM1) 17

3.11.2 General-purpose timers (TIM2, 3, 14, 16, 17) 17

3.11.3 Independent watchdog (IWDG) 18

3.11.4 System window watchdog (WWDG) 18

3.11.5 SysTick timer 19

3.12 Real-time clock (RTC) and backup registers 19

3.13 Inter-integrated circuit interface (I^2C) 19

3.14 Universal synchronous/asynchronous receiver/transmitter (USART) . . . 20

3.15 Serial peripheral interface (SPI) / Inter-integrated sound interface (I^2S) . 21
3.16 Serial wire debug port (SW-DP) 22

4 Pinouts and pin description 23

5 Memory mapping 33

6 Electrical characteristics 36
6.1 Parameter conditions 36
6.1.1 Minimum and maximum values 36
6.1.2 Typical values 36
6.1.3 Typical curves 36
6.1.4 Loading capacitor 36
6.1.5 Pin input voltage 36
6.1.6 Power supply scheme 37
6.1.7 Current consumption measurement 38
6.2 Absolute maximum ratings 39
6.3 Operating conditions 41
6.3.1 General operating conditions 41
6.3.2 Operating conditions at power-up / power-down 41
6.3.3 Embedded reset and power control block characteristics 42
6.3.4 Embedded reference voltage 43
6.3.5 Supply current characteristics 43
6.3.6 Wakeup time from low-power mode 53
6.3.7 External clock source characteristics 53
6.3.8 Internal clock source characteristics 57
6.3.9 PLL characteristics 60
6.3.10 Memory characteristics 60
6.3.11 EMC characteristics 61
6.3.12 Electrical sensitivity characteristics 62
6.3.13 I/O current injection characteristics 63
6.3.14 I/O port characteristics 64
6.3.15 NRST pin characteristics 69
6.3.16 12-bit ADC characteristics 70
6.3.17 Temperature sensor characteristics 74
6.3.18 V_{BAT} monitoring characteristics 74
6.3.19 Timer characteristics 74

6.3.20 Communication interfaces 75

7 Package information 81

7.1 LQFP48 package information 81

7.2 LQFP32 package information 84

7.3 UFQFPN32 package information 86

7.4 UFQFPN28 package information 90

7.5 WLCSP25 package information 93

7.6 TSSOP20 package information 96

7.7 Thermal characteristics 99

7.7.1 Reference document 99

7.7.2 Selecting the product temperature range 100

8 Ordering information 102

9 Revision history 103

List of tables

Table 1. Device summary . . . 1
Table 2. STM32F031x4/x6 family device features and peripheral counts . . . 9
Table 3. Temperature sensor calibration values . . . 16
Table 4. Internal voltage reference calibration values . . . 16
Table 5. Timer feature comparison . . . 17
Table 6. Comparison of I^2C analog and digital filters . . . 20
Table 7. STM32F031x4/x6 I^2C implementation . . . 20
Table 8. STM32F031x4/x6 USART implementation . . . 21
Table 9. STM32F031x4/x6 SPI/I2S implementation . . . 21
Table 10. Legend/abbreviations used in the pinout table . . . 26
Table 11. Pin definitions . . . 26
Table 12. Alternate functions selected through GPIOA_AFR registers for port A . . . 31
Table 13. Alternate functions selected through GPIOB_AFR registers for port B . . . 32
Table 14. Peripheral register boundary addresses . . . 34
Table 15. Voltage characteristics . . . 39
Table 16. Current characteristics . . . 40
Table 17. Thermal characteristics . . . 40
Table 18. General operating conditions . . . 41
Table 19. Operating conditions at power-up / power-down . . . 42
Table 20. Embedded reset and power control block characteristics . . . 42
Table 21. Programmable voltage detector characteristics . . . 42
Table 22. Embedded internal reference voltage . . . 43
Table 23. Typical and maximum current consumption from V_{DD} at 3.6 V . . . 44
Table 24. Typical and maximum current consumption from the V_{DDA} supply . . . 45
Table 25. Typical and maximum current consumption in Stop and Standby modes . . . 46
Table 26. Typical and maximum current consumption from the V_{BAT} supply . . . 47
Table 27. Typical current consumption, code executing from Flash memory, running from HSE 8 MHz crystal . . . 48
Table 28. Switching output I/O current consumption . . . 50
Table 29. Peripheral current consumption . . . 51
Table 30. Low-power mode wakeup timings . . . 53
Table 31. High-speed external user clock characteristics . . . 53
Table 32. Low-speed external user clock characteristics . . . 54
Table 33. HSE oscillator characteristics . . . 55
Table 34. LSE oscillator characteristics (f_{LSE} = 32.768 kHz) . . . 56
Table 35. HSI oscillator characteristics . . . 58
Table 36. HSI14 oscillator characteristics . . . 59
Table 37. LSI oscillator characteristics . . . 60
Table 38. PLL characteristics . . . 60
Table 39. Flash memory characteristics . . . 60
Table 40. Flash memory endurance and data retention . . . 61
Table 41. EMS characteristics . . . 61
Table 42. EMI characteristics . . . 62
Table 43. ESD absolute maximum ratings . . . 63
Table 44. Electrical sensitivities . . . 63
Table 45. I/O current injection susceptibility . . . 64
Table 46. I/O static characteristics . . . 64
Table 47. Output voltage characteristics . . . 67

Table 48. I/O AC characteristics . . . 68
Table 49. NRST pin characteristics . . . 69
Table 50. ADC characteristics . . . 70
Table 51. R_{AIN} max for f_{ADC} = 14 MHz . . . 71
Table 52. ADC accuracy . . . 72
Table 53. TS characteristics . . . 74
Table 54. V_{BAT} monitoring characteristics . . . 74
Table 55. TIMx characteristics . . . 74
Table 56. IWDG min/max timeout period at 40 kHz (LSI) . . . 75
Table 57. WWDG min/max timeout value at 48 MHz (PCLK) . . . 75
Table 58. I^2C analog filter characteristics . . . 76
Table 59. SPI characteristics . . . 76
Table 60. I^2S characteristics . . . 78
Table 61. LQFP48 package mechanical data . . . 82
Table 62. LQFP32 package mechanical data . . . 85
Table 63. UFQFPN32 package mechanical data . . . 88
Table 64. UFQFPN28 package mechanical data . . . 90
Table 65. WLCSP25 package mechanical data . . . 93
Table 66. WLCSP25 recommended PCB design rules . . . 94
Table 67. TSSOP20 package mechanical data . . . 96
Table 68. Package thermal characteristics . . . 99
Table 69. Ordering information scheme . . . 102
Table 70. Document revision history . . . 103

List of figures

Figure 1. Block diagram . . . 10
Figure 2. Clock tree . . . 14
Figure 3. LQFP48 package pinout . . . 23
Figure 4. LQFP32 package pinout . . . 23
Figure 5. UFQFPN32 package pinout . . . 24
Figure 6. UFQFPN28 package pinout . . . 24
Figure 7. WLCSP25 package pinout . . . 25
Figure 8. TSSOP20 package pinout . . . 25
Figure 9. STM32F031x6 memory map . . . 33
Figure 10. Pin loading conditions . . . 36
Figure 11. Pin input voltage . . . 36
Figure 12. Power supply scheme . . . 37
Figure 13. Current consumption measurement scheme . . . 38
Figure 14. High-speed external clock source AC timing diagram . . . 54
Figure 15. Low-speed external clock source AC timing diagram . . . 54
Figure 16. Typical application with an 8 MHz crystal . . . 56
Figure 17. Typical application with a 32.768 kHz crystal . . . 57
Figure 18. HSI oscillator accuracy characterization results for soldered parts . . . 58
Figure 19. HSI14 oscillator accuracy characterization results . . . 59
Figure 20. TC and TTa I/O input characteristics . . . 66
Figure 21. Five volt tolerant (FT and FTf) I/O input characteristics . . . 66
Figure 22. I/O AC characteristics definition . . . 69
Figure 23. Recommended NRST pin protection . . . 70
Figure 24. ADC accuracy characteristics . . . 73
Figure 25. Typical connection diagram using the ADC . . . 73
Figure 26. SPI timing diagram - slave mode and CPHA = 0 . . . 77
Figure 27. SPI timing diagram - slave mode and CPHA = 1 . . . 77
Figure 28. SPI timing diagram - master mode . . . 78
Figure 29. I^2S slave timing diagram (Philips protocol) . . . 79
Figure 30. I^2S master timing diagram (Philips protocol) . . . 80
Figure 31. LQFP48 package outline . . . 81
Figure 32. Recommended footprint for LQFP48 package . . . 82
Figure 33. LQFP48 package marking example . . . 83
Figure 34. LQFP32 package outline . . . 84
Figure 35. Recommended footprint for LQFP32 package . . . 85
Figure 36. LQFP32 package marking example . . . 86
Figure 37. UFQFPN32 package outline . . . 87
Figure 38. Recommended footprint for UFQFPN32 package . . . 88
Figure 39. UFQFPN32 package marking example . . . 89
Figure 40. UFQFPN28 package outline . . . 90
Figure 41. Recommended footprint for UFQFPN28 package . . . 91
Figure 42. UFQFPN28 package marking example . . . 92
Figure 43. WLCSP25 package outline . . . 93
Figure 44. Recommended footprint for WLCSP25 package . . . 94
Figure 45. WLCSP25 package marking example . . . 95
Figure 46. TSSOP20 package outline . . . 96
Figure 47. Recommended footprint for TSSOP20 package . . . 97
Figure 48. TSSOP20 package marking example . . . 98

1 Introduction

This datasheet provides the ordering information and mechanical device characteristics of the STM32F031x4/x6 microcontrollers.

This document should be read in conjunction with the STM32F0xxxx reference manual (RM0091). The reference manual is available from the STMicroelectronics website *www.st.com*.

For information on the ARM® Cortex®-M0 core, please refer to the Cortex®-M0 Technical Reference Manual, available from the www.arm.com website.

2 Description

The STM32F031x4/x6 microcontrollers incorporate the high-performance ARM® Cortex®-M0 32-bit RISC core operating at up to 48 MHz frequency, high-speed embedded memories (up to 32 Kbytes of Flash memory and 4 Kbytes of SRAM), and an extensive range of enhanced peripherals and I/Os. All devices offer standard communication interfaces (one I^2C, one SPI/ I^2S and one USART), one 12-bit ADC,
five 16-bit timers, one 32-bit timer and an advanced-control PWM timer.

The STM32F031x4/x6 microcontrollers operate in the -40 to +85 °C and -40 to +105 °C temperature ranges, from a 2.0 to 3.6 V power supply. A comprehensive set of power-saving modes allows the design of low-power applications.

The STM32F031x4/x6 microcontrollers include devices in six different packages ranging from 20 pins to 48 pins with a die form also available upon request. Depending on the device chosen, different sets of peripherals are included.

These features make the STM32F031x4/x6 microcontrollers suitable for a wide range of applications such as application control and user interfaces, hand-held equipment, A/V receivers and digital TV, PC peripherals, gaming and GPS platforms, industrial applications, PLCs, inverters, printers, scanners, alarm systems, video intercoms and HVACs.

Table 2. STM32F031x4/x6 family device features and peripheral counts

Peripheral		STM32F031Fx		STM32F031Ex	STM32F031Gx		STM32F031Kx		STM32F031Cx	
Flash memory (Kbyte)		16	32	32	16	32	16	32	16	32
SRAM (Kbyte)		4								
Timers	Advanced control	1 (16-bit)								
	General purpose	4 (16-bit) 1 (32-bit)								
Comm. interfaces	SPI [I^2S](1)	1 [1]								
	I^2C	1								
	USART	1								
12-bit ADC (number of channels)		1 (9 ext. + 3 int.)		1 (10 ext. + 3 int.)						
GPIOs		15		20	23		25 (on LQFP32) 27 (on UFQFPN32)		39	
Max. CPU frequency		48 MHz								
Operating voltage		2.0 to 3.6 V								
Operating temperature		Ambient operating temperature: -40°C to 85°C / -40°C to 105°C Junction temperature: -40°C to 105°C / -40°C to 125°C								
Packages		TSSOP20		WLCSP25	UFQFPN28		LQFP32 UFQFPN32		LQFP48	

1. The SPI interface can be used either in SPI mode or in I^2S audio mode.

Figure 1. Block diagram

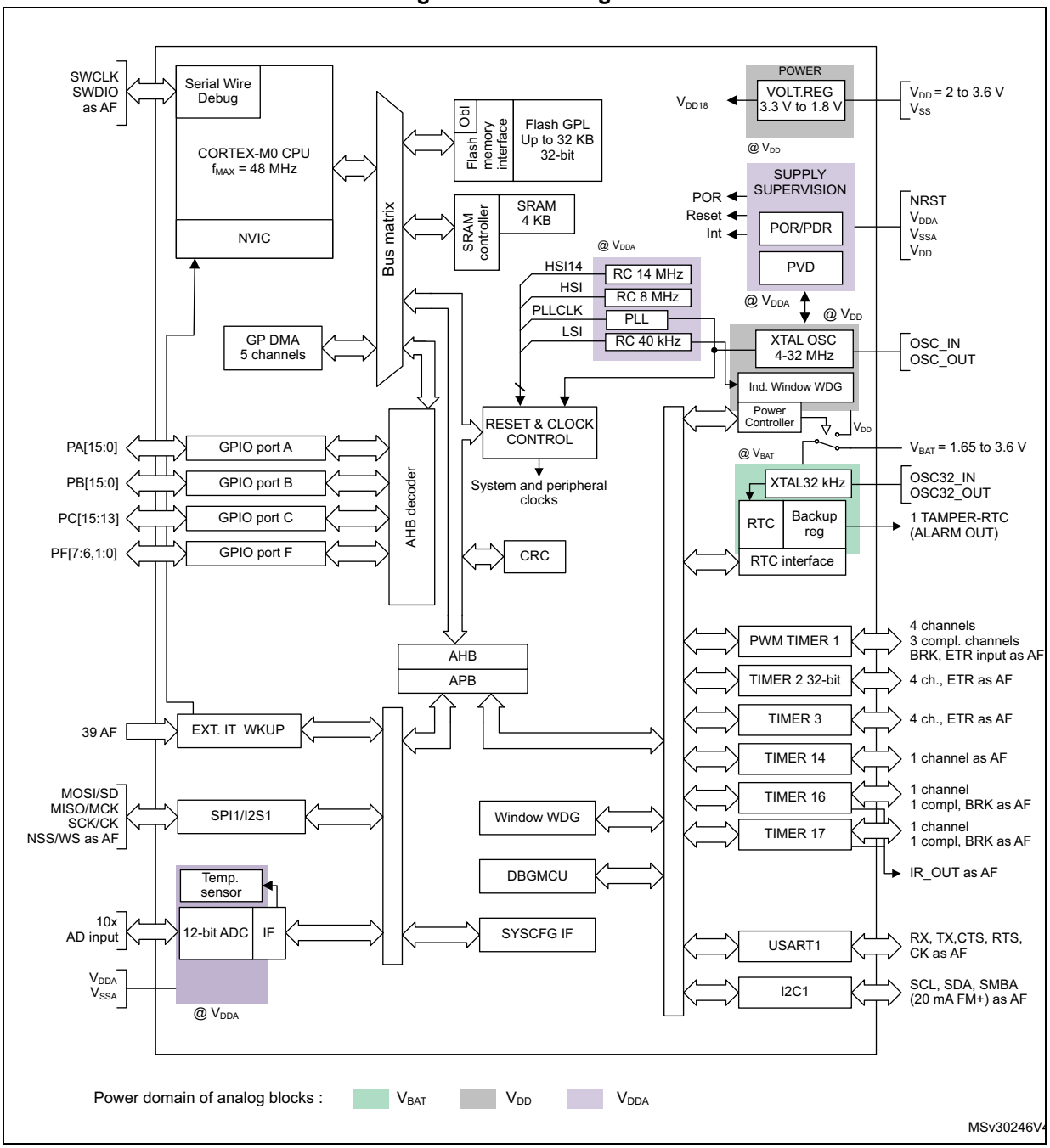

3 Functional overview

Figure 1 shows the general block diagram of the STM32F031x4/x6 devices.

3.1 ARM®-Cortex®-M0 core

The ARM® Cortex®-M0 is a generation of ARM 32-bit RISC processors for embedded systems. It has been developed to provide a low-cost platform that meets the needs of MCU implementation, with a reduced pin count and low-power consumption, while delivering outstanding computational performance and an advanced system response to interrupts.

The ARM® Cortex®-M0 processors feature exceptional code-efficiency, delivering the high performance expected from an ARM core, with memory sizes usually associated with 8- and 16-bit devices.

The STM32F031x4/x6 devices embed ARM core and are compatible with all ARM tools and software.

3.2 Memories

The device has the following features:

- 4 Kbytes of embedded SRAM accessed (read/write) at CPU clock speed with 0 wait states and featuring embedded parity checking with exception generation for fail-critical applications.
- The non-volatile memory is divided into two arrays:
  - 16 to 32 Kbytes of embedded Flash memory for programs and data
  - Option bytes

  The option bytes are used to write-protect the memory (with 4 KB granularity) and/or readout-protect the whole memory with the following options:
  - Level 0: no readout protection
  - Level 1: memory readout protection, the Flash memory cannot be read from or written to if either debug features are connected or boot in RAM is selected
  - Level 2: chip readout protection, debug features (Cortex®-M0 serial wire) and boot in RAM selection disabled

3.3 Boot modes

At startup, the boot pin and boot selector option bit are used to select one of the three boot options:

- boot from User Flash memory
- boot from System Memory
- boot from embedded SRAM

The boot loader is located in System Memory. It is used to reprogram the Flash memory by using USART on pins PA14/PA15 or PA9/PA10.

3.4 Cyclic redundancy check calculation unit (CRC)

The CRC (cyclic redundancy check) calculation unit is used to get a CRC code from a 32-bit data word and a CRC-32 (Ethernet) polynomial.

Among other applications, CRC-based techniques are used to verify data transmission or storage integrity. In the scope of the EN/IEC 60335-1 standard, they offer a means of verifying the Flash memory integrity. The CRC calculation unit helps compute a signature of the software during runtime, to be compared with a reference signature generated at link-time and stored at a given memory location.

3.5 Power management

3.5.1 Power supply schemes

- V_{DD} = V_{DDIO1} = 2.0 to 3.6 V: external power supply for I/Os (V_{DDIO1}) and the internal regulator. It is provided externally through VDD pins.
- V_{DDA} = from V_{DD} to 3.6 V: external analog power supply for ADC, Reset blocks, RCs and PLL (minimum voltage to be applied to V_{DDA} is 2.4 V when the ADC is used). It is provided externally through VDDA pin. The V_{DDA} voltage level must be always greater or equal to the V_{DD} voltage level and must be established first.
- V_{BAT} = 1.65 to 3.6 V: power supply for RTC, external clock 32 kHz oscillator and backup registers (through power switch) when V_{DD} is not present.

For more details on how to connect power pins, refer to *Figure 12: Power supply scheme*.

3.5.2 Power supply supervisors

The device has integrated power-on reset (POR) and power-down reset (PDR) circuits. They are always active, and ensure proper operation above a threshold of 2 V. The device remains in reset mode when the monitored supply voltage is below a specified threshold, $V_{POR/PDR}$, without the need for an external reset circuit.

- The POR monitors only the V_{DD} supply voltage. During the startup phase it is required that V_{DDA} should arrive first and be greater than or equal to V_{DD}.
- The PDR monitors both the V_{DD} and V_{DDA} supply voltages, however the V_{DDA} power supply supervisor can be disabled (by programming a dedicated Option bit) to reduce the power consumption if the application design ensures that V_{DDA} is higher than or equal to V_{DD}.

The device features an embedded programmable voltage detector (PVD) that monitors the V_{DD} power supply and compares it to the V_{PVD} threshold. An interrupt can be generated when V_{DD} drops below the V_{PVD} threshold and/or when V_{DD} is higher than the V_{PVD} threshold. The interrupt service routine can then generate a warning message and/or put the MCU into a safe state. The PVD is enabled by software.

3.5.3 Voltage regulator

The regulator has two operating modes and it is always enabled after reset.

- Main (MR) is used in normal operating mode (Run).
- Low power (LPR) can be used in Stop mode where the power demand is reduced.

In Standby mode, it is put in power down mode. In this mode, the regulator output is in high impedance and the kernel circuitry is powered down, inducing zero consumption (but the contents of the registers and SRAM are lost).

3.5.4 Low-power modes

The STM32F031x4/x6 microcontrollers support three low-power modes to achieve the best compromise between low power consumption, short startup time and available wakeup sources:

- **Sleep mode**

  In Sleep mode, only the CPU is stopped. All peripherals continue to operate and can wake up the CPU when an interrupt/event occurs.

- **Stop mode**

  Stop mode achieves very low power consumption while retaining the content of SRAM and registers. All clocks in the 1.8 V domain are stopped, the PLL, the HSI RC and the HSE crystal oscillators are disabled. The voltage regulator can also be put either in normal or in low power mode.

  The device can be woken up from Stop mode by any of the EXTI lines. The EXTI line source can be one of the 16 external lines, the PVD output, RTC, I2C1 or USART1.

  USART1 and I2C1 peripherals can be configured to enable the HSI RC oscillator so as to get clock for processing incoming data. If this is used when the voltage regulator is put in low power mode, the regulator is first switched to normal mode before the clock is provided to the given peripheral.

- **Standby mode**

  The Standby mode is used to achieve the lowest power consumption. The internal voltage regulator is switched off so that the entire 1.8 V domain is powered off. The PLL, the HSI RC and the HSE crystal oscillators are also switched off. After entering Standby mode, SRAM and register contents are lost except for registers in the RTC domain and Standby circuitry.

  The device exits Standby mode when an external reset (NRST pin), an IWDG reset, a rising edge on the WKUP pins, or an RTC event occurs.

Note: The RTC, the IWDG, and the corresponding clock sources are not stopped by entering Stop or Standby mode.

3.6 Clocks and startup

System clock selection is performed on startup, however the internal RC 8 MHz oscillator is selected as default CPU clock on reset. An external 4-32 MHz clock can be selected, in which case it is monitored for failure. If failure is detected, the system automatically switches back to the internal RC oscillator. A software interrupt is generated if enabled. Similarly, full interrupt management of the PLL clock entry is available when necessary (for example on failure of an indirectly used external crystal, resonator or oscillator).

Several prescalers allow the application to configure the frequency of the AHB and the APB domains. The maximum frequency of the AHB and the APB domains is 48 MHz.

Figure 2. Clock tree

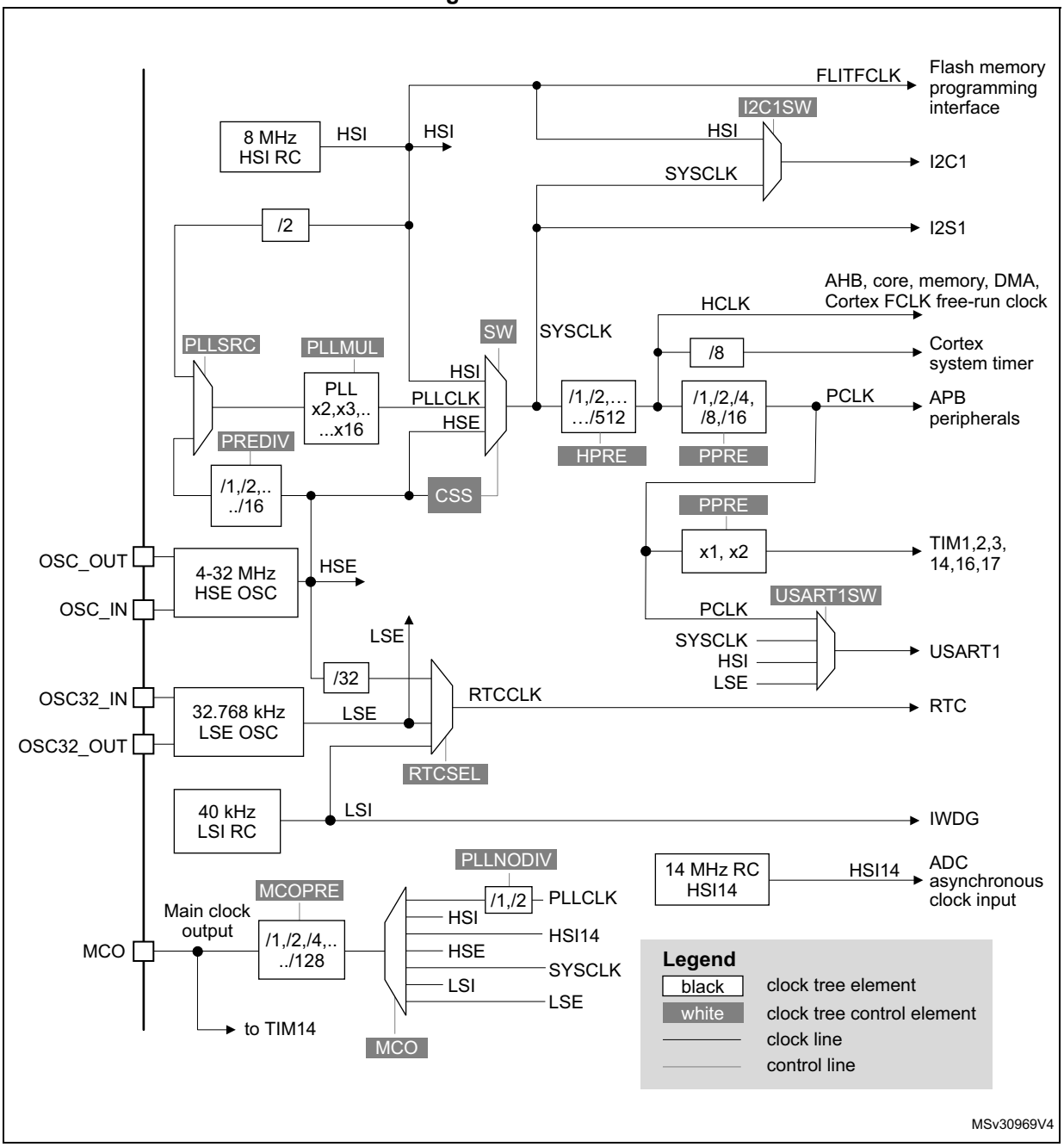

3.7 General-purpose inputs/outputs (GPIOs)

Each of the GPIO pins can be configured by software as output (push-pull or open-drain), as input (with or without pull-up or pull-down) or as peripheral alternate function. Most of the GPIO pins are shared with digital or analog alternate functions.

The I/O configuration can be locked if needed following a specific sequence in order to avoid spurious writing to the I/Os registers.

3.8 Direct memory access controller (DMA)

The 5-channel general-purpose DMAs manage memory-to-memory, peripheral-to-memory and memory-to-peripheral transfers.

The DMA supports circular buffer management, removing the need for user code intervention when the controller reaches the end of the buffer.

Each channel is connected to dedicated hardware DMA requests, with support for software trigger on each channel. Configuration is made by software and transfer sizes between source and destination are independent.

DMA can be used with the main peripherals: SPIx, I2Sx, I2Cx, USARTx, all TIMx timers (except TIM14) and ADC.

3.9 Interrupts and events

3.9.1 Nested vectored interrupt controller (NVIC)

The STM32F0xx family embeds a nested vectored interrupt controller able to handle up to 32 maskable interrupt channels (not including the 16 interrupt lines of Cortex®-M0) and 4 priority levels.

- Closely coupled NVIC gives low latency interrupt processing
- Interrupt entry vector table address passed directly to the core
- Closely coupled NVIC core interface
- Allows early processing of interrupts
- Processing of late arriving higher priority interrupts
- Support for tail-chaining
- Processor state automatically saved
- Interrupt entry restored on interrupt exit with no instruction overhead

This hardware block provides flexible interrupt management features with minimal interrupt latency.

3.9.2 Extended interrupt/event controller (EXTI)

The extended interrupt/event controller consists of 24 edge detector lines used to generate interrupt/event requests and wake-up the system. Each line can be independently configured to select the trigger event (rising edge, falling edge, both) and can be masked independently. A pending register maintains the status of the interrupt requests. The EXTI can detect an external line with a pulse width shorter than the internal clock period. Up to 39 GPIOs can be connected to the 16 external interrupt lines.

3.10 Analog-to-digital converter (ADC)

The 12-bit analog-to-digital converter has up to 16 external and 3 internal (temperature sensor, voltage reference, VBAT voltage measurement) channels and performs conversions in single-shot or scan modes. In scan mode, automatic conversion is performed on a selected group of analog inputs.

The ADC can be served by the DMA controller.

An analog watchdog feature allows very precise monitoring of the converted voltage of one, some or all selected channels. An interrupt is generated when the converted voltage is outside the programmed thresholds.

3.10.1 Temperature sensor

The temperature sensor (TS) generates a voltage V_{SENSE} that varies linearly with temperature.

The temperature sensor is internally connected to the ADC_IN16 input channel which is used to convert the sensor output voltage into a digital value.

The sensor provides good linearity but it has to be calibrated to obtain good overall accuracy of the temperature measurement. As the offset of the temperature sensor varies from chip to chip due to process variation, the uncalibrated internal temperature sensor is suitable for applications that detect temperature changes only.

To improve the accuracy of the temperature sensor measurement, each device is individually factory-calibrated by ST. The temperature sensor factory calibration data are stored by ST in the system memory area, accessible in read-only mode.

Table 3. Temperature sensor calibration values

Calibration value name	Description	Memory address
TS_CAL1	TS ADC raw data acquired at a temperature of 30 °C (± 5 °C), V_{DDA}= 3.3 V (± 10 mV)	0x1FFF F7B8 - 0x1FFF F7B9
TS_CAL2	TS ADC raw data acquired at a temperature of 110 °C (± 5 °C), V_{DDA}= 3.3 V (± 10 mV)	0x1FFF F7C2 - 0x1FFF F7C3

3.10.2 Internal voltage reference (V_{REFINT})

The internal voltage reference (V_{REFINT}) provides a stable (bandgap) voltage output for the ADC. V_{REFINT} is internally connected to the ADC_IN17 input channel. The precise voltage of V_{REFINT} is individually measured for each part by ST during production test and stored in the system memory area. It is accessible in read-only mode.

Table 4. Internal voltage reference calibration values

Calibration value name	Description	Memory address
VREFINT_CAL	Raw data acquired at a temperature of 30 °C (± 5 °C), V_{DDA}= 3.3 V (± 10 mV)	0x1FFF F7BA - 0x1FFF F7BB

3.10.3 V_{BAT} battery voltage monitoring

This embedded hardware feature allows the application to measure the V_{BAT} battery voltage using the internal ADC channel ADC_IN18. As the V_{BAT} voltage may be higher than V_{DDA}, and thus outside the ADC input range, the V_{BAT} pin is internally connected to a bridge divider by 2. As a consequence, the converted digital value is half the V_{BAT} voltage.

3.11 Timers and watchdogs

The STM32F031x4/x6 devices include up to five general-purpose timers and an advanced control timer.

Table 5 compares the features of the different timers.

Table 5. Timer feature comparison

Timer type	Timer	Counter resolution	Counter type	Prescaler factor	DMA request generation	Capture/compare channels	Complementary outputs
Advanced control	TIM1	16-bit	Up, down, up/down	integer from 1 to 65536	Yes	4	3
General purpose	TIM2	32-bit	Up, down, up/down	integer from 1 to 65536	Yes	4	-
	TIM3	16-bit	Up, down, up/down	integer from 1 to 65536	Yes	4	-
	TIM14	16-bit	Up	integer from 1 to 65536	No	1	-
	TIM16 TIM17	16-bit	Up	integer from 1 to 65536	Yes	1	1

3.11.1 Advanced-control timer (TIM1)

The advanced-control timer (TIM1) can be seen as a three-phase PWM multiplexed on six channels. It has complementary PWM outputs with programmable inserted dead times. It can also be seen as a complete general-purpose timer. The four independent channels can be used for:

- input capture
- output compare
- PWM generation (edge or center-aligned modes)
- one-pulse mode output

If configured as a standard 16-bit timer, it has the same features as the TIMx timer. If configured as the 16-bit PWM generator, it has full modulation capability (0-100%).

The counter can be frozen in debug mode.

Many features are shared with those of the standard timers which have the same architecture. The advanced control timer can therefore work together with the other timers via the Timer Link feature for synchronization or event chaining.

3.11.2 General-purpose timers (TIM2, 3, 14, 16, 17)

There are five synchronizable general-purpose timers embedded in the STM32F031x4/x6 devices (see *Table 5* for differences). Each general-purpose timer can be used to generate PWM outputs, or as simple time base.

TIM2, TIM3

STM32F031x4/x6 devices feature two synchronizable 4-channel general-purpose timers. TIM2 is based on a 32-bit auto-reload up/downcounter and a 16-bit prescaler. TIM3 is based on a 16-bit auto-reload up/downcounter and a 16-bit prescaler. They feature 4 independent channels each for input capture/output compare, PWM or one-pulse mode output. This gives up to 12 input captures/output compares/PWMs on the largest packages.

The TIM2 and TIM3 general-purpose timers can work together or with the TIM1 advanced-control timer via the Timer Link feature for synchronization or event chaining.

TIM2 and TIM3 both have independent DMA request generation.

These timers are capable of handling quadrature (incremental) encoder signals and the digital outputs from 1 to 3 hall-effect sensors.

Their counters can be frozen in debug mode.

TIM14

This timer is based on a 16-bit auto-reload upcounter and a 16-bit prescaler.

TIM14 features one single channel for input capture/output compare, PWM or one-pulse mode output.

Its counter can be frozen in debug mode.

TIM16 and TIM17

Both timers are based on a 16-bit auto-reload upcounter and a 16-bit prescaler.

They each have a single channel for input capture/output compare, PWM or one-pulse mode output.

TIM16 and TIM17 have a complementary output with dead-time generation and independent DMA request generation.

Their counters can be frozen in debug mode.

3.11.3 Independent watchdog (IWDG)

The independent watchdog is based on an 8-bit prescaler and 12-bit downcounter with user-defined refresh window. It is clocked from an independent 40 kHz internal RC and as it operates independently from the main clock, it can operate in Stop and Standby modes. It can be used either as a watchdog to reset the device when a problem occurs, or as a free running timer for application timeout management. It is hardware or software configurable through the option bytes. The counter can be frozen in debug mode.

3.11.4 System window watchdog (WWDG)

The system window watchdog is based on a 7-bit downcounter that can be set as free running. It can be used as a watchdog to reset the device when a problem occurs. It is clocked from the APB clock (PCLK). It has an early warning interrupt capability and the counter can be frozen in debug mode.

3.11.5 SysTick timer

This timer is dedicated to real-time operating systems, but could also be used as a standard down counter. It features:

- a 24-bit down counter
- autoreload capability
- maskable system interrupt generation when the counter reaches 0
- programmable clock source (HCLK or HCLK/8)

3.12 Real-time clock (RTC) and backup registers

The RTC and the five backup registers are supplied through a switch that takes power either on V_{DD} supply when present or through the V_{BAT} pin. The backup registers are five 32-bit registers used to store 20 bytes of user application data when V_{DD} power is not present. They are not reset by a system or power reset, or at wake up from Standby mode.

The RTC is an independent BCD timer/counter. Its main features are the following:

- calendar with subseconds, seconds, minutes, hours (12 or 24 format), week day, date, month, year, in BCD (binary-coded decimal) format
- automatic correction for 28, 29 (leap year), 30, and 31 day of the month
- programmable alarm with wake up from Stop and Standby mode capability
- on-the-fly correction from 1 to 32767 RTC clock pulses. This can be used to synchronize the RTC with a master clock
- digital calibration circuit with 1 ppm resolution, to compensate for quartz crystal inaccuracy
- two anti-tamper detection pins with programmable filter. The MCU can be woken up from Stop and Standby modes on tamper event detection
- timestamp feature which can be used to save the calendar content. This function can be triggered by an event on the timestamp pin, or by a tamper event. The MCU can be woken up from Stop and Standby modes on timestamp event detection
- reference clock detection: a more precise second source clock (50 or 60 Hz) can be used to enhance the calendar precision

The RTC clock sources can be:

- a 32.768 kHz external crystal
- a resonator or oscillator
- the internal low-power RC oscillator (typical frequency of 40 kHz)
- the high-speed external clock divided by 32

3.13 Inter-integrated circuit interface (I^2C)

The I^2C interface (I2C1) can operate in multimaster or slave modes. It can support Standard mode (up to 100 kbit/s), Fast mode (up to 400 kbit/s) and Fast Mode Plus (up to 1 Mbit/s) with 20 mA output drive.

It supports 7-bit and 10-bit addressing modes, multiple 7-bit slave addresses (two addresses, one with configurable mask). It also includes programmable analog and digital noise filters.

Table 6. Comparison of I²C analog and digital filters

Aspect	Analog filter	Digital filter
Pulse width of suppressed spikes	≥ 50 ns	Programmable length from 1 to 15 I2Cx peripheral clocks
Benefits	Available in Stop mode	–Extra filtering capability vs. standard requirements –Stable length
Drawbacks	Variations depending on temperature, voltage, process	Wakeup from Stop on address match is not available when digital filter is enabled.

In addition, I2C1 provides hardware support for SMBUS 2.0 and PMBUS 1.1: ARP capability, Host notify protocol, hardware CRC (PEC) generation/verification, timeouts verifications and ALERT protocol management. I2C1 also has a clock domain independent from the CPU clock, allowing the I2C1 to wake up the MCU from Stop mode on address match.

The I2C peripheral can be served by the DMA controller.

Table 7. STM32F031x4/x6 I²C implementation

I²C features(1)	I2C1
7-bit addressing mode	X
10-bit addressing mode	X
Standard mode (up to 100 kbit/s)	X
Fast mode (up to 400 kbit/s)	X
Fast Mode Plus with 20 mA output drive I/Os (up to 1 Mbit/s)	X
Independent clock	X
SMBus	X
Wakeup from STOP	X

1. X = supported.

3.14 Universal synchronous/asynchronous receiver/transmitter (USART)

The device embeds one universal synchronous/asynchronous receiver/transmitter (USART1) which communicates at speeds of up to 6 Mbit/s.

It provides hardware management of the CTS, RTS and RS485 DE signals, multiprocessor communication mode, master synchronous communication and single-wire half-duplex communication mode. USART1 supports also SmartCard communication (ISO 7816), IrDA SIR ENDEC, LIN Master/Slave capability and auto baud rate feature, and has a clock domain independent of the CPU clock, allowing to wake up the MCU from Stop mode.

The USART interface can be served by the DMA controller.

Table 8. STM32F031x4/x6 USART implementation

USART modes/features[1]	USART1
Hardware flow control for modem	X
Continuous communication using DMA	X
Multiprocessor communication	X
Synchronous mode	X
Smartcard mode	X
Single-wire half-duplex communication	X
IrDA SIR ENDEC block	X
LIN mode	X
Dual clock domain and wakeup from Stop mode	X
Receiver timeout interrupt	X
Modbus communication	X
Auto baud rate detection	X
Driver Enable	X

1. X = supported.

3.15 Serial peripheral interface (SPI) / Inter-integrated sound interface (I^2S)

The SPI is able to communicate up to 18 Mbit/s in slave and master modes in full-duplex and half-duplex communication modes. The 3-bit prescaler gives 8 master mode frequencies and the frame size is configurable from 4 bits to 16 bits.

One standard I^2S interface (multiplexed with SPI1) supporting four different audio standards can operate as master or slave at half-duplex communication mode. It can be configured to transfer 16 and 24 or 32 bits with 16-bit or 32-bit data resolution and synchronized by a specific signal. Audio sampling frequency from 8 kHz up to 192 kHz can be set by an 8-bit programmable linear prescaler. When operating in master mode, it can output a clock for an external audio component at 256 times the sampling frequency.

Table 9. STM32F031x4/x6 SPI/I^2S implementation

SPI features[1]	SPI
Hardware CRC calculation	X
Rx/Tx FIFO	X
NSS pulse mode	X
I^2S mode	X
TI mode	X

1. X = supported.

3.16 Serial wire debug port (SW-DP)

An ARM SW-DP interface is provided to allow a serial wire debugging tool to be connected to the MCU.

4 Pinouts and pin description

Figure 3. LQFP48 package pinout

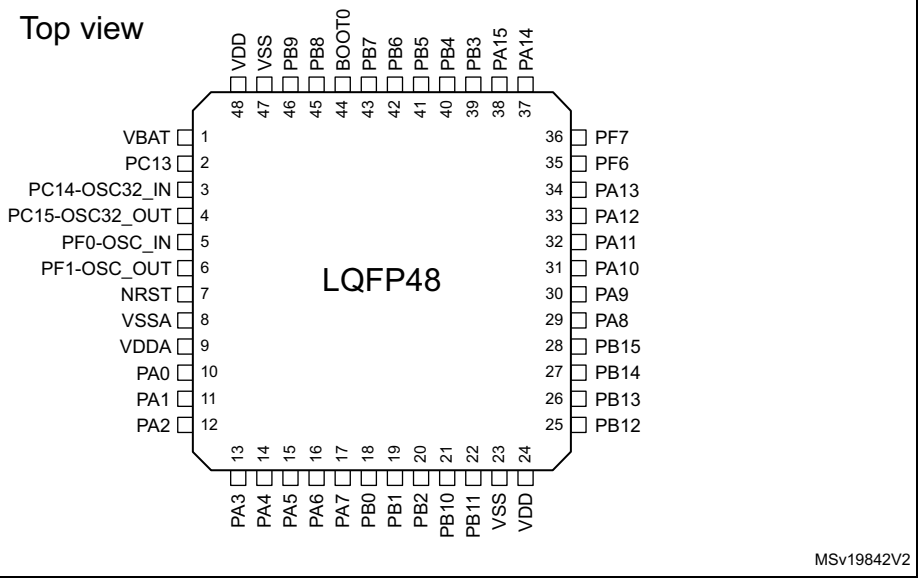

Figure 4. LQFP32 package pinout

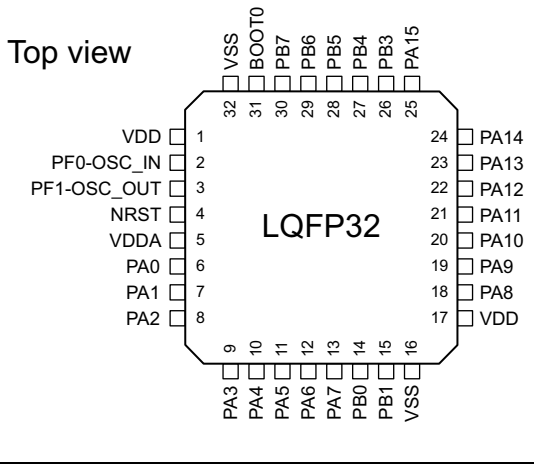

Figure 5. UFQFPN32 package pinout

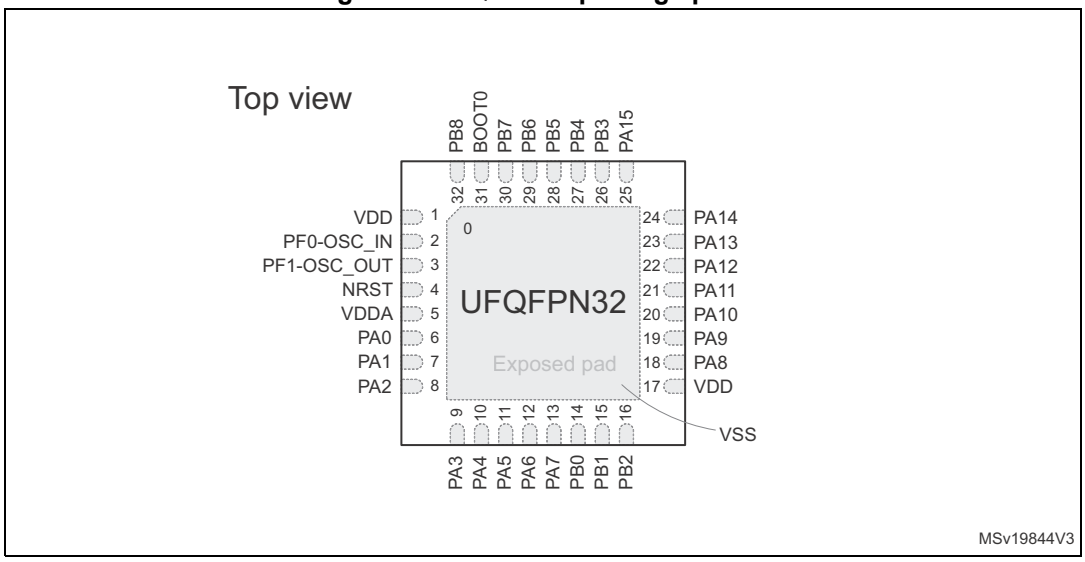

Figure 6. UFQFPN28 package pinout

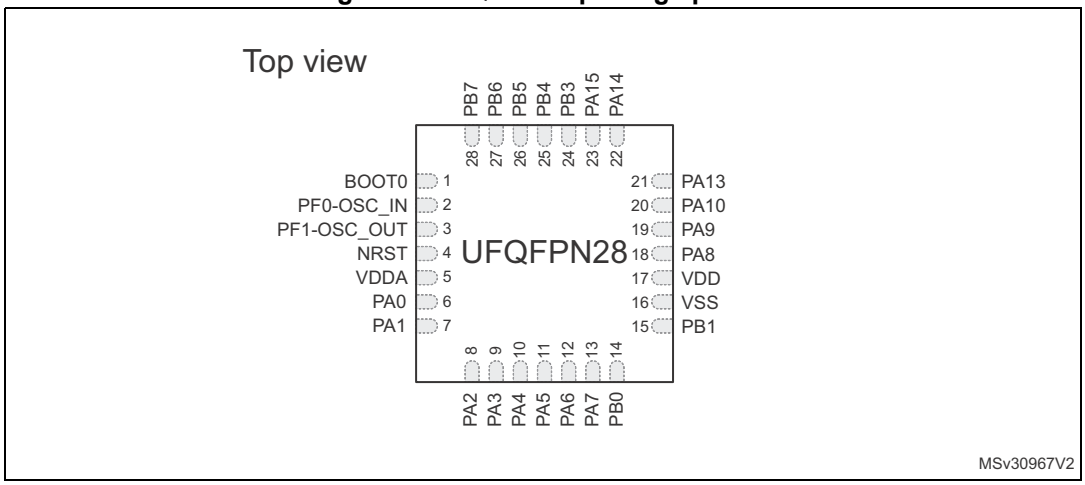

Figure 7. WLCSP25 package pinout

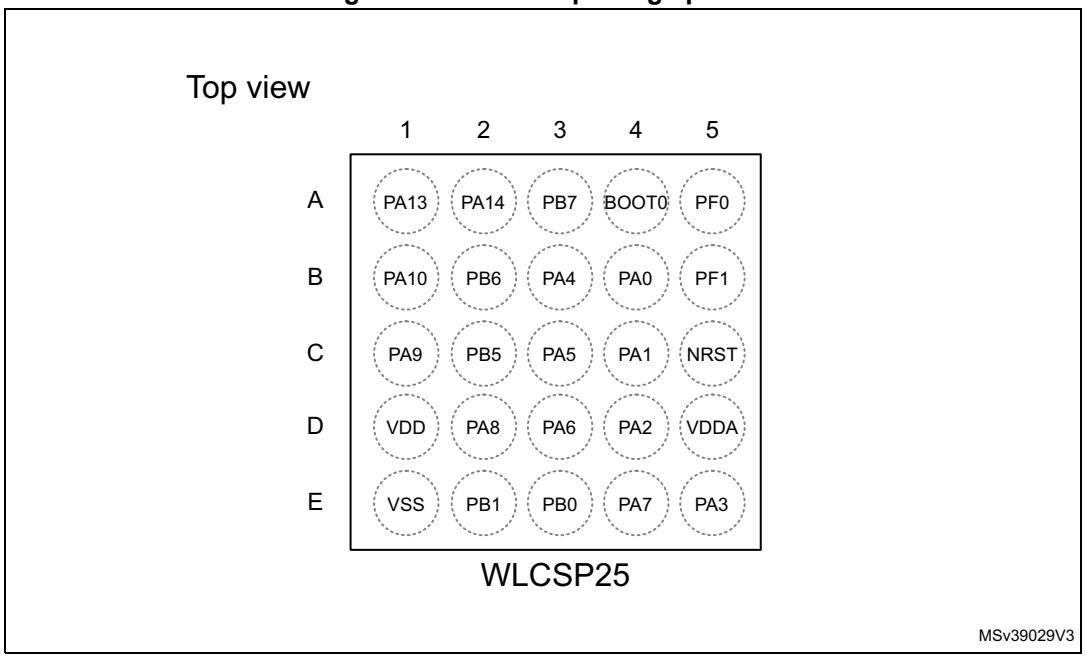

1. The above figure shows the package in top view, changing from bottom view in the previous document versions.

Figure 8. TSSOP20 package pinout

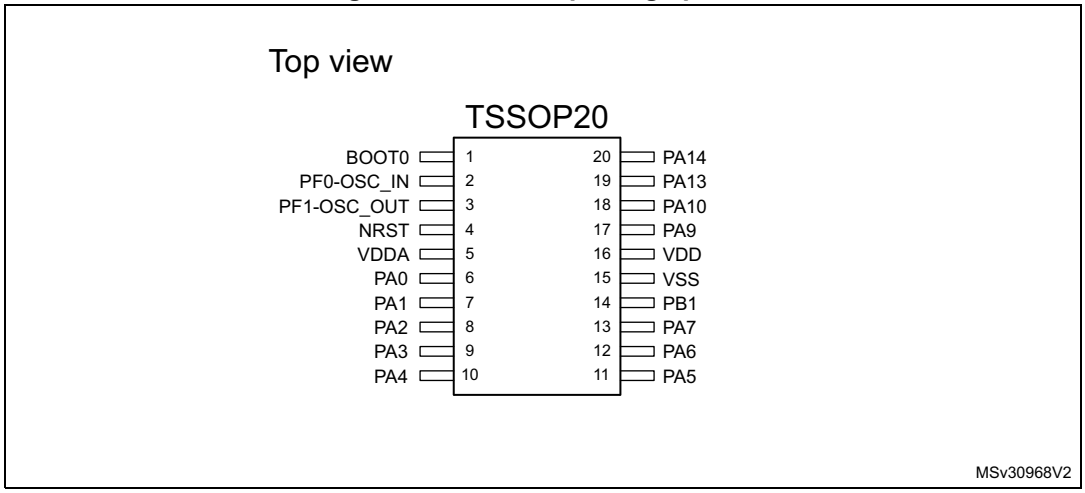

Table 10. Legend/abbreviations used in the pinout table

Name		Abbreviation	Definition
Pin name		Unless otherwise specified in brackets below the pin name, the pin function during and after reset is the same as the actual pin name	
Pin type		S	Supply pin
		I	Input-only pin
		I/O	Input / output pin
I/O structure		FT	5 V-tolerant I/O
		FTf	5 V-tolerant I/O, FM+ capable
		TTa	3.3 V-tolerant I/O directly connected to ADC
		TC	Standard 3.3V I/O
		B	Dedicated BOOT0 pin
		RST	Bidirectional reset pin with embedded weak pull-up resistor
Notes		Unless otherwise specified by a note, all I/Os are set as floating inputs during and after reset	
Pin functions	Alternate functions	Functions selected through GPIOx_AFR registers	
	Additional functions	Functions directly selected/enabled through peripheral registers	

Table 11. Pin definitions

Pin number						Pin name (function upon reset)	Pin type	I/O structure	Notes	Pin functions	
LQFP48	LQFP32	UFQFPN32	UFQFPN28	WLCSP25	TSSOP20					Alternate functions	Additional functions
1	-	-	-	-	-	VBAT	S	-	-	Backup power supply	
2	-	-	-	-	-	PC13	I/O	TC	(1)(2)	-	RTC_TAMP1, RTC_TS, RTC_OUT, WKUP2
3	-	-	-	-	-	PC14-OSC32_IN (PC14)	I/O	TC	(1)(2)	-	OSC32_IN
4	-	-	-	-	-	PC15-OSC32_OUT (PC15)	I/O	TC	(1)(2)	-	OSC32_OUT
5	2	2	2	A5	2	PF0-OSC_IN (PF0)	I/O	FT	-	-	OSC_IN

Table 11. Pin definitions (continued)

Pin number						Pin name (function upon reset)	Pin type	I/O structure	Notes	Pin functions	
LQFP48	LQFP32	UFQFPN32	UFQFPN28	WLCSP25	TSSOP20					Alternate functions	Additional functions
6	3	3	3	B5	3	PF1-OSC_OUT (PF1)	I/O	FT	-	-	OSC_OUT
7	4	4	4	C5	4	NRST	I/O	RST	-	Device reset input / internal reset output (active low)	
8	16 (3)	0(3)	16 (3)	E1 (3)	15 (3)	VSSA	S		-	Analog ground	
9	5	5	5	D5	5	VDDA	S		-	Analog power supply	
10	6	6	6	B4	6	PA0	I/O	TTa	-	TIM2_CH1_ETR, USART1_CTS	ADC_IN0, RTC_TAMP2, WKUP1
11	7	7	7	C4	7	PA1	I/O	TTa	-	TIM2_CH2, EVENTOUT, USART1_RTS	ADC_IN1
12	8	8	8	D4	8	PA2	I/O	TTa	-	TIM2_CH3, USART1_TX	ADC_IN2
13	9	9	9	E5	9	PA3	I/O	TTa	-	TIM2_CH4, USART1_RX	ADC_IN3
14	10	10	10	B3	10	PA4	I/O	TTa	-	SPI1_NSS, I2S1_WS, TIM14_CH1, USART1_CK	ADC_IN4
15	11	11	11	C3	11	PA5	I/O	TTa	-	SPI1_SCK, I2S1_CK, TIM2_CH1_ETR	ADC_IN5
16	12	12	12	D3	12	PA6	I/O	TTa	-	SPI1_MISO, I2S1_MCK, TIM3_CH1, TIM1_BKIN, TIM16_CH1, EVENTOUT	ADC_IN6

Table 11. Pin definitions (continued)

Pin number						Pin name (function upon reset)	Pin type	I/O structure	Notes	Pin functions	
LQFP48	LQFP32	UFQFPN32	UFQFPN28	WLCSP25	TSSOP20					Alternate functions	Additional functions
17	13	13	13	E4	13	PA7	I/O	TTa	-	SPI1_MOSI, I2S1_SD, TIM3_CH2, TIM14_CH1, TIM1_CH1N, TIM17_CH1, EVENTOUT	ADC_IN7
18	14	14	14	E3	-	PB0	I/O	TTa	-	TIM3_CH3, TIM1_CH2N, EVENTOUT	ADC_IN8
19	15	15	15	E2	14	PB1	I/O	TTa	-	TIM3_CH4, TIM14_CH1, TIM1_CH3N	ADC_IN9
20	-	16	-	-	-	PB2	I/O	FT	(4)	-	-
21	-	-	-	-	-	PB10	I/O	FTf	-	TIM2_CH3, I2C1_SCL	-
22	-	-	-	-	-	PB11	I/O	FTf	-	TIM2_CH4, EVENTOUT, I2C1_SDA	-
23	16	0	16	E1	15	VSS	S	-	-	Ground	
24	17	17	17	D1	16	VDD	S	-	-	Digital power supply	
25	-	-	-	-	-	PB12	I/O	FT	-	TIM1_BKIN, EVENTOUT, SPI1_NSS	-
26	-	-	-	-	-	PB13	I/O	FT	-	TIM1_CH1N, SPI1_SCK	-
27	-	-	-	-	-	PB14	I/O	FT	-	TIM1_CH2N, SPI1_MISO	-
28	-	-	-	-	-	PB15	I/O	FT	-	TIM1_CH3N, SPI1_MOSI	RTC_REFIN
29	18	18	18	D2	-	PA8	I/O	FT	-	USART1_CK, TIM1_CH1, EVENTOUT, MCO	-

Table 11. Pin definitions (continued)

Pin number						Pin name (function upon reset)	Pin type	I/O structure	Notes	Pin functions	
LQFP48	LQFP32	UFQFPN32	UFQFPN28	WLCSP25	TSSOP20					Alternate functions	Additional functions
30	19	19	19	C1	17	PA9	I/O	FTf	-	USART1_TX, TIM1_CH2, I2C1_SCL	-
31	20	20	20	B1	18	PA10	I/O	FTf	-	USART1_RX, TIM1_CH3, TIM17_BKIN, I2C1_SDA	-
32	21	21	-	-	-	PA11	I/O	FT	-	USART1_CTS, TIM1_CH4, EVENTOUT	-
33	22	22	-	-	-	PA12	I/O	FT	-	USART1_RTS, TIM1_ETR, EVENTOUT	-
34	23	23	21	A1	19	PA13 (SWDIO)	I/O	FT	(5)	IR_OUT, SWDIO	-
35	-	-	-	-	-	PF6	I/O	FTf	-	I2C1_SCL	-
36	-	-	-	-	-	PF7	I/O	FTf	-	I2C1_SDA	-
37	24	24	22	A2	20	PA14 (SWCLK)	I/O	FT	(5)	USART1_TX, SWCLK	-
38	25	25	23	-	-	PA15	I/O	FT	(6)	SPI1_NSS, I2S1_WS, TIM2_CH_ETR, EVENTOUT, USART1_RX	-
39	26	26	24	-	-	PB3	I/O	FT	(6)	SPI1_SCK, I2S1_CK, TIM2_CH2, EVENTOUT	-
40	27	27	25	-	-	PB4	I/O	FT	(6)	SPI1_MISO, I2S1_MCK, TIM3_CH1, EVENTOUT	-

Table 11. Pin definitions (continued)

Pin number						Pin name (function upon reset)	Pin type	I/O structure	Notes	Pin functions	
LQFP48	LQFP32	UFQFPN32	UFQFPN28	WLCSP25	TSSOP20					Alternate functions	Additional functions
41	28	28	26	C2	-	PB5	I/O	FT	-	SPI1_MOSI, I2S1_SD, I2C1_SMBA, TIM16_BKIN, TIM3_CH2	-
42	29	29	27	B2	-	PB6	I/O	FTf	-	I2C1_SCL, USART1_TX, TIM16_CH1N	-
43	30	30	28	A3	-	PB7	I/O	FTf	-	I2C1_SDA, USART1_RX, TIM17_CH1N	-
44	31	31	1	A4	1	BOOT0	I	B	-	Boot memory selection	
45	-	32	-	-	-	PB8	I/O	FTf	(4)	I2C1_SCL, TIM16_CH1	-
46	-	-	-	-	-	PB9	I/O	FTf	-	I2C1_SDA, IR_OUT, TIM17_CH1, EVENTOUT	-
47	32	0	-	E1	-	VSS	S	-	-	Ground	
48	1	1	-	-	-	VDD	S	-	-	Digital power supply	

1. PC13, PC14 and PC15 are supplied through the power switch. Since the switch only sinks a limited amount of current (3 mA), the use of GPIOs PC13 to PC15 in output mode is limited:
   - The speed should not exceed 2 MHz with a maximum load of 30 pF
   - These GPIOs must not be used as current sources (e.g. to drive an LED).
2. After the first RTC domain power-up, PC13, PC14 and PC15 operate as GPIOs. Their function then depends on the content of the RTC registers which are not reset by the system reset. For details on how to manage these GPIOs, refer to the RTC domain and RTC register descriptions in the reference manual.
3. VSSA pin is not in package pinout. VSSA pad of the die is connected to VSS pin.
4. On the LQFP32 package, PB2 and PB8 should be treated as unconnected pins (even when they are not available on the package, they are not forced to a defined level by hardware).
5. After reset, these pins are configured as SWDIO and SWCLK alternate functions, and the internal pull-up on the SWDIO pin and the internal pull-down on the SWCLK pin are activated.
6. On the WLCSP25 package, PB3, PB4 and PA15 must be set to defined levels by software, as their corresponding pads on the silicon die are left unconnected. Apply same recommendations as for unconnected pins.

Table 12. Alternate functions selected through GPIOA_AFR registers for port A

Pin name	AF0	AF1	AF2	AF3	AF4	AF5	AF6	AF7
PA0	-	USART1_CTS	TIM2_CH1_ ETR	-	-	-	-	-
PA1	EVENTOUT	USART1_RTS	TIM2_CH2	-	-	-	-	-
PA2	-	USART1_TX	TIM2_CH3	-	-	-	-	-
PA3	-	USART1_RX	TIM2_CH4	-	-	-	-	-
PA4	SPI1_NSS, I2S1_WS	USART1_CK	-	-	TIM14_CH1	-	-	-
PA5	SPI1_SCK, I2S1_CK	-	TIM2_CH1_ ETR	-	-	-	-	-
PA6	SPI1_MISO, I2S1_MCK	TIM3_CH1	TIM1_BKIN	-	-	TIM16_CH1	EVENTOUT	-
PA7	SPI1_MOSI, I2S1_SD	TIM3_CH2	TIM1_CH1N	-	TIM14_CH1	TIM17_CH1	EVENTOUT	-
PA8	MCO	USART1_CK	TIM1_CH1	EVENTOUT	-	-	-	-
PA9	-	USART1_TX	TIM1_CH2	-	I2C1_SCL	-	-	-
PA10	TIM17_BKIN	USART1_RX	TIM1_CH3	-	I2C1_SDA	-	-	-
PA11	EVENTOUT	USART1_CTS	TIM1_CH4	-	-	-	-	-
PA12	EVENTOUT	USART1_RTS	TIM1_ETR	-	-	-	-	-
PA13	SWDIO	IR_OUT	-	-	-	-	-	-
PA14	SWCLK	USART1_TX	-	-	-	-	-	-
PA15	SPI1_NSS, I2S1_WS	USART1_RX	TIM2_CH1_ ETR	EVENTOUT	-	-	-	-

Table 13. Alternate functions selected through GPIOB_AFR registers for port B

Pin name	AF0	AF1	AF2	AF3
PB0	EVENTOUT	TIM3_CH3	TIM1_CH2N	-
PB1	TIM14_CH1	TIM3_CH4	TIM1_CH3N	-
PB2	-	-	-	-
PB3	SPI1_SCK, I2S1_CK	EVENTOUT	TIM2_CH2	-
PB4	SPI1_MISO, I2S1_MCK	TIM3_CH1	EVENTOUT	-
PB5	SPI1_MOSI, I2S1_SD	TIM3_CH2	TIM16_BKIN	I2C1_SMBA
PB6	USART1_TX	I2C1_SCL	TIM16_CH1N	-
PB7	USART1_RX	I2C1_SDA	TIM17_CH1N	-
PB8	-	I2C1_SCL	TIM16_CH1	-
PB9	IR_OUT	I2C1_SDA	TIM17_CH1	EVENTOUT
PB10	-	I2C1_SCL	TIM2_CH3	-
PB11	EVENTOUT	I2C1_SDA	TIM2_CH4	-
PB12	SPI1_NSS	EVENTOUT	TIM1_BKIN	-
PB13	SPI1_SCK	-	TIM1_CH1N	-
PB14	SPI1_MISO	-	TIM1_CH2N	-
PB15	SPI1_MOSI	-	TIM1_CH3N	-

5 Memory mapping

To the difference of STM32F031x6 memory map in *Figure 9*, the two bottom code memory spaces of STM32F031x4 end at 0x0000 3FFF and 0x0800 3FFF, respectively.

Figure 9. STM32F031x6 memory map

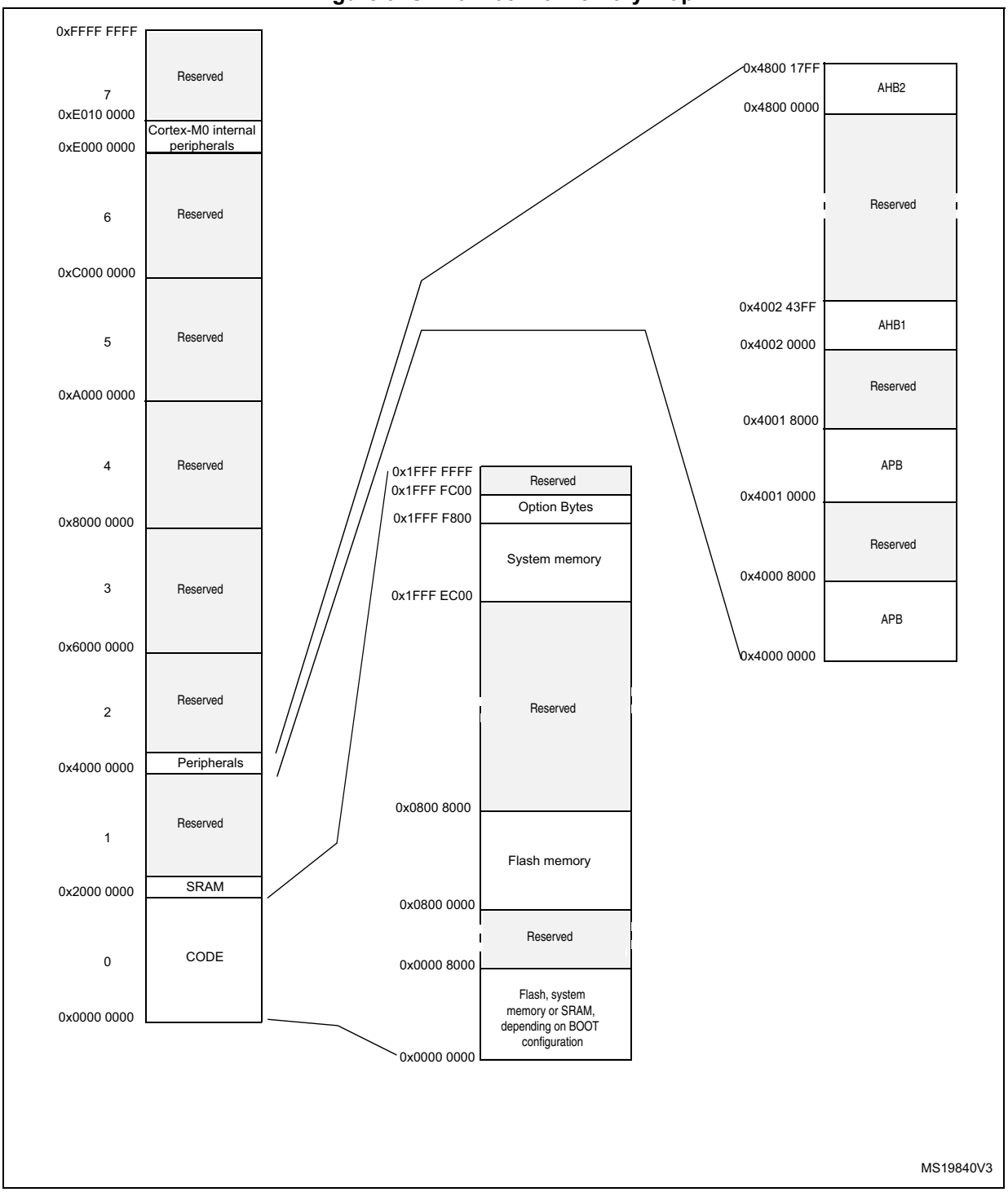

Table 14. Peripheral register boundary addresses

Bus	Boundary address	Size	Peripheral
	0x4800 1800 - 0x5FFF FFFF	~384 MB	Reserved
AHB2	0x4800 1400 - 0x4800 17FF	1KB	GPIOF
	0x4800 0C00 - 0x4800 13FF	2KB	Reserved
	0x4800 0800 - 0x4800 0BFF	1KB	GPIOC
	0x4800 0400 - 0x4800 07FF	1KB	GPIOB
	0x4800 0000 - 0x4800 03FF	1KB	GPIOA
	0x4002 4400 - 0x47FF FFFF	~128 MB	Reserved
AHB1	0x4002 3400 - 0x4002 3FFF	3 KB	Reserved
	0x4002 3000 - 0x4002 33FF	1 KB	CRC
	0x4002 2400 - 0x4002 2FFF	3 KB	Reserved
	0x4002 2000 - 0x4002 23FF	1 KB	Flash memory interface
	0x4002 1400 - 0x4002 1FFF	3 KB	Reserved
	0x4002 1000 - 0x4002 13FF	1 KB	RCC
	0x4002 0400 - 0x4002 0FFF	3 KB	Reserved
	0x4002 0000 - 0x4002 03FF	1 KB	DMA
	0x4001 8000 - 0x4001 FFFF	32 KB	Reserved
APB	0x4001 5C00 - 0x4001 7FFF	9KB	Reserved
	0x4001 5800 - 0x4001 5BFF	1KB	DBGMCU
	0x4001 4C00 - 0x4001 57FF	3KB	Reserved
	0x4001 4800 - 0x4001 4BFF	1KB	TIM17
	0x4001 4400 - 0x4001 47FF	1KB	TIM16
	0x4001 3C00 - 0x4001 43FF	2KB	Reserved
	0x4001 3800 - 0x4001 3BFF	1KB	USART1
	0x4001 3400 - 0x4001 37FF	1KB	Reserved
	0x4001 3000 - 0x4001 33FF	1KB	SPI1/I2S1
	0x4001 2C00 - 0x4001 2FFF	1KB	TIM1
	0x4001 2800 - 0x4001 2BFF	1KB	Reserved
	0x4001 2400 - 0x4001 27FF	1KB	ADC
	0x4001 0800 - 0x4001 23FF	7KB	Reserved
	0x4001 0400 - 0x4001 07FF	1KB	EXTI
	0x4001 0000 - 0x4001 03FF	1KB	SYSCFG
	0x4000 8000 - 0x4000 FFFF	32 KB	Reserved

Table 14. Peripheral register boundary addresses (continued)

Bus	Boundary address	Size	Peripheral
APB	0x4000 7400 - 0x4000 7FFF	3KB	Reserved
	0x4000 7000 - 0x4000 73FF	1KB	PWR
	0x4000 5800 - 0x4000 6FFF	6KB	Reserved
	0x4000 5400 - 0x4000 57FF	1KB	I2C1
	0x4000 3400 - 0x4000 53FF	8KB	Reserved
	0x4000 3000 - 0x4000 33FF	1KB	IWDG
	0x4000 2C00 - 0x4000 2FFF	1KB	WWDG
	0x4000 2800 - 0x4000 2BFF	1KB	RTC
	0x4000 2400 - 0x4000 27FF	1KB	Reserved
	0x4000 2000 - 0x4000 23FF	1KB	TIM14
	0x4000 0800 - 0x4000 1FFF	6KB	Reserved
	0x4000 0400 - 0x4000 07FF	1KB	TIM3
	0x4000 0000 - 0x4000 03FF	1KB	TIM2

6 Electrical characteristics

6.1 Parameter conditions

Unless otherwise specified, all voltages are referenced to V_{SS}.

6.1.1 Minimum and maximum values

Unless otherwise specified, the minimum and maximum values are guaranteed in the worst conditions of ambient temperature, supply voltage and frequencies by tests in production on 100% of the devices with an ambient temperature at T_A = 25 °C and T_A = $T_A$max (given by the selected temperature range).

Data based on characterization results, design simulation and/or technology characteristics are indicated in the table footnotes and are not tested in production. Based on characterization, the minimum and maximum values refer to sample tests and represent the mean value plus or minus three times the standard deviation (mean ±3σ).

6.1.2 Typical values

Unless otherwise specified, typical data are based on T_A = 25 °C, V_{DD} = V_{DDA} = 3.3 V. They are given only as design guidelines and are not tested.

Typical ADC accuracy values are determined by characterization of a batch of samples from a standard diffusion lot over the full temperature range, where 95% of the devices have an error less than or equal to the value indicated (mean ±2σ).

6.1.3 Typical curves

Unless otherwise specified, all typical curves are given only as design guidelines and are not tested.

6.1.4 Loading capacitor

The loading conditions used for pin parameter measurement are shown in *Figure 10*.

6.1.5 Pin input voltage

The input voltage measurement on a pin of the device is described in *Figure 11*.

Figure 10. Pin loading conditions

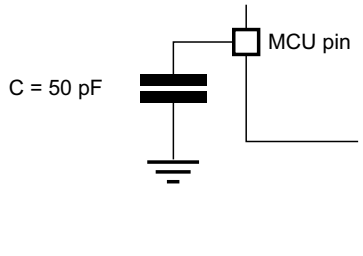

Figure 11. Pin input voltage

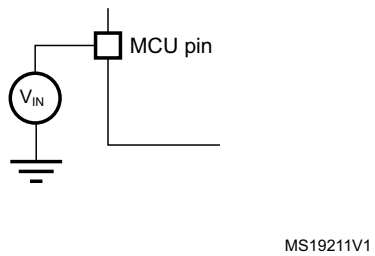

6.1.6 Power supply scheme

Figure 12. Power supply scheme

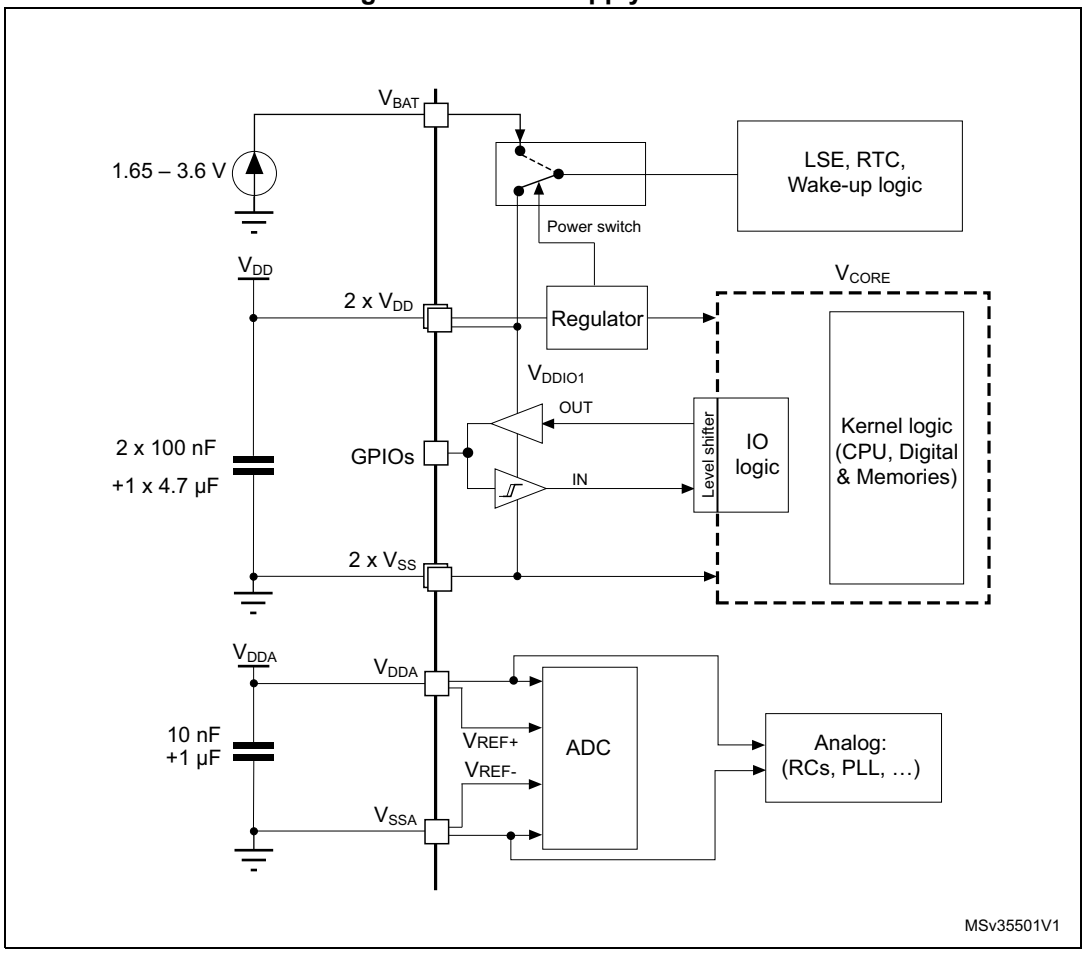

Caution: Each power supply pair (V_{DD}/V_{SS}, V_{DDA}/V_{SSA} etc.) must be decoupled with filtering ceramic capacitors as shown above. These capacitors must be placed as close as possible to, or below, the appropriate pins on the underside of the PCB to ensure the good functionality of the device.

6.1.7 Current consumption measurement

Figure 13. Current consumption measurement scheme

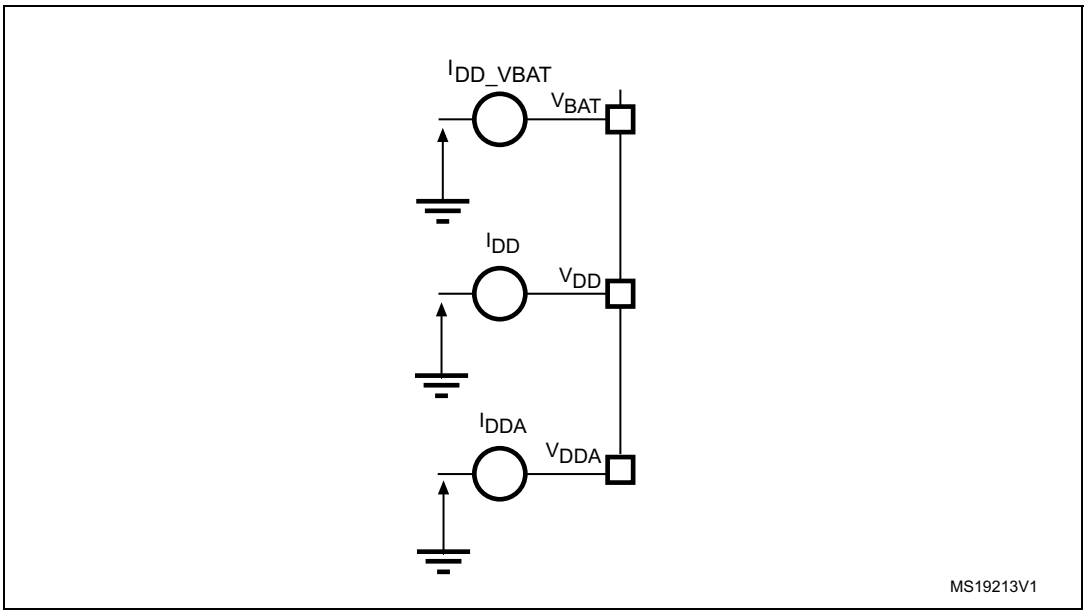

6.2 Absolute maximum ratings

Stresses above the absolute maximum ratings listed in *Table 15: Voltage characteristics*, *Table 16: Current characteristics* and *Table 17: Thermal characteristics* may cause permanent damage to the device. These are stress ratings only and functional operation of the device at these conditions is not implied. Exposure to maximum rating conditions for extended periods may affect device reliability.

Table 15. Voltage characteristics(1)

Symbol	Ratings	Min	Max	Unit
$V_{DD}–V_{SS}$	External main supply voltage	- 0.3	4.0	V
$V_{DDA}–V_{SS}$	External analog supply voltage	- 0.3	4.0	V
$V_{DD}–V_{DDA}$	Allowed voltage difference for $V_{DD} > V_{DDA}$	-	0.4	V
$V_{BAT}–V_{SS}$	External backup supply voltage	- 0.3	4.0	V
V_{IN}(2)	Input voltage on FT and FTf pins	V_{SS} - 0.3	V_{DDIOx} + 4.0(3)	V
	Input voltage on TTa pins	V_{SS} - 0.3	4.0	V
	BOOT0	0	9.0	V
	Input voltage on any other pin	V_{SS} - 0.3	4.0	V
$\|\Delta V_{DDx}\|$	Variations between different V_{DD} power pins	-	50	mV
$\|V_{SSx} - V_{SS}\|$	Variations between all the different ground pins	-	50	mV
$V_{ESD(HBM)}$	Electrostatic discharge voltage (human body model)	see *Section 6.3.12: Electrical sensitivity characteristics*		-

1. All main power (V_{DD}, V_{DDA}) and ground (V_{SS}, V_{SSA}) pins must always be connected to the external power supply, in the permitted range.
2. V_{IN} maximum must always be respected. Refer to *Table 16: Current characteristics* for the maximum allowed injected current values.
3. Valid only if the internal pull-up/pull-down resistors are disabled. If internal pull-up or pull-down resistor is enabled, the maximum limit is 4 V.

Table 16. Current characteristics

Symbol	Ratings	Max.	Unit
ΣI_{VDD}	Total current into sum of all VDD power lines (source)(1)	120	mA
ΣI_{VSS}	Total current out of sum of all VSS ground lines (sink)(1)	-120	
$I_{VDD(PIN)}$	Maximum current into each VDD power pin (source)(1)	100	
$I_{VSS(PIN)}$	Maximum current out of each VSS ground pin (sink)(1)	-100	
$I_{IO(PIN)}$	Output current sunk by any I/O and control pin	25	
	Output current source by any I/O and control pin	-25	
$\Sigma I_{IO(PIN)}$	Total output current sunk by sum of all I/Os and control pins(2)	80	
	Total output current sourced by sum of all I/Os and control pins(2)	-80	
$I_{INJ(PIN)}$(3)	Injected current on B, FT and FTf pins	-5/+0(4)	
	Injected current on TC and RST pin	± 5	
	Injected current on TTa pins(5)	± 5	
$\Sigma I_{INJ(PIN)}$	Total injected current (sum of all I/O and control pins)(6)	± 25	

1. All main power (VDD, VDDA) and ground (VSS, VSSA) pins must always be connected to the external power supply, in the permitted range.
2. This current consumption must be correctly distributed over all I/Os and control pins. The total output current must not be sunk/sourced between two consecutive power supply pins referring to high pin count QFP packages.
3. A positive injection is induced by $V_{IN} > V_{DDIOx}$ while a negative injection is induced by $V_{IN} < V_{SS}$. $I_{INJ(PIN)}$ must never be exceeded. Refer to *Table 15: Voltage characteristics* for the maximum allowed input voltage values.
4. Positive injection is not possible on these I/Os and does not occur for input voltages lower than the specified maximum value.
5. On these I/Os, a positive injection is induced by $V_{IN} > V_{DDA}$. Negative injection disturbs the analog performance of the device. See note (2) below *Table 52: ADC accuracy*.
6. When several inputs are submitted to a current injection, the maximum $\Sigma I_{INJ(PIN)}$ is the absolute sum of the positive and negative injected currents (instantaneous values).

Table 17. Thermal characteristics

Symbol	Ratings	Value	Unit
T_{STG}	Storage temperature range	–65 to +150	°C
T_J	Maximum junction temperature	150	°C

6.3 Operating conditions

6.3.1 General operating conditions

Table 18. General operating conditions

Symbol	Parameter	Conditions	Min	Max	Unit
f_{HCLK}	Internal AHB clock frequency	-	0	48	MHz
f_{PCLK}	Internal APB clock frequency	-	0	48	
V_{DD}	Standard operating voltage	-	2.0	3.6	V
V_{DDA}	Analog operating voltage (ADC not used)	Must have a potential equal to or higher than V_{DD}	V_{DD}	3.6	V
	Analog operating voltage (ADC used)		2.4	3.6	
V_{BAT}	Backup operating voltage	-	1.65	3.6	V
V_{IN}	I/O input voltage	TC and RST I/O	–0.3	V_{DDIOx}+0.3	V
		TTa I/O	–0.3	V_{DDA}+0.3(1)	
		FT and FTf I/O	–0.3	5.5(1)	
		BOOT0	0	5.5	
P_D	Power dissipation at T_A = 85 °C for suffix 6 or T_A = 105 °C for suffix 7(2)	LQFP48	-	364	mW
		UFQFPN32	-	526	
		LQFP32	-	357	
		UFQFPN28	-	169	
		WLCSP25	-	267	
		TSSOP20	-	182	
T_A	Ambient temperature for the suffix 6 version	Maximum power dissipation	–40	85	°C
		Low power dissipation(3)	–40	105	
	Ambient temperature for the suffix 7 version	Maximum power dissipation	–40	105	°C
		Low power dissipation(3)	–40	125	
T_J	Junction temperature range	Suffix 6 version	–40	105	°C
		Suffix 7 version	–40	125	

1. For operation with a voltage higher than V_{DDIOx} + 0.3 V, the internal pull-up resistor must be disabled.
2. If T_A is lower, higher P_D values are allowed as long as T_J does not exceed T_{Jmax}. See *Section 7.7: Thermal characteristics*.
3. In low power dissipation state, T_A can be extended to this range as long as T_J does not exceed T_{Jmax} (see *Section 7.7: Thermal characteristics*).

6.3.2 Operating conditions at power-up / power-down

The parameters given in *Table 19* are derived from tests performed under the ambient temperature condition summarized in *Table 18*.

Table 19. Operating conditions at power-up / power-down

Symbol	Parameter	Conditions	Min	Max	Unit
t_{VDD}	V_{DD} rise time rate	-	0	∞	µs/V
	V_{DD} fall time rate		20	∞	
t_{VDDA}	V_{DDA} rise time rate	-	0	∞	
	V_{DDA} fall time rate		20	∞	

6.3.3 Embedded reset and power control block characteristics

The parameters given in *Table 20* are derived from tests performed under the ambient temperature and supply voltage conditions summarized in *Table 18: General operating conditions*.

Table 20. Embedded reset and power control block characteristics

Symbol	Parameter	Conditions	Min	Typ	Max	Unit
$V_{POR/PDR}$(1)	Power on/power down reset threshold	Falling edge(2)	1.80	1.88	1.96(3)	V
		Rising edge	1.84(3)	1.92	2.00	V
$V_{PDRhyst}$	PDR hysteresis	-	-	40	-	mV
$t_{RSTTEMPO}$(4)	Reset temporization	-	1.50	2.50	4.50	ms

1. The PDR detector monitors V_{DD} and also V_{DDA} (if kept enabled in the option bytes). The POR detector monitors only V_{DD}.
2. The product behavior is guaranteed by design down to the minimum $V_{POR/PDR}$ value.
3. Data based on characterization results, not tested in production.
4. Guaranteed by design, not tested in production.

Table 21. Programmable voltage detector characteristics

Symbol	Parameter	Conditions	Min	Typ	Max	Unit
V_{PVD0}	PVD threshold 0	Rising edge	2.1	2.18	2.26	V
		Falling edge	2	2.08	2.16	V
V_{PVD1}	PVD threshold 1	Rising edge	2.19	2.28	2.37	V
		Falling edge	2.09	2.18	2.27	V
V_{PVD2}	PVD threshold 2	Rising edge	2.28	2.38	2.48	V
		Falling edge	2.18	2.28	2.38	V
V_{PVD3}	PVD threshold 3	Rising edge	2.38	2.48	2.58	V
		Falling edge	2.28	2.38	2.48	V
V_{PVD4}	PVD threshold 4	Rising edge	2.47	2.58	2.69	V
		Falling edge	2.37	2.48	2.59	V
V_{PVD5}	PVD threshold 5	Rising edge	2.57	2.68	2.79	V
		Falling edge	2.47	2.58	2.69	V

Table 21. Programmable voltage detector characteristics (continued)

Symbol	Parameter	Conditions	Min	Typ	Max	Unit
V_{PVD6}	PVD threshold 6	Rising edge	2.66	2.78	2.9	V
		Falling edge	2.56	2.68	2.8	V
V_{PVD7}	PVD threshold 7	Rising edge	2.76	2.88	3	V
		Falling edge	2.66	2.78	2.9	V
$V_{PVDhyst}$(1)	PVD hysteresis	-	-	100	-	mV
$I_{DD(PVD)}$	PVD current consumption	-	-	0.15	0.26(1)	µA

1. Guaranteed by design, not tested in production.

6.3.4 Embedded reference voltage

The parameters given in *Table 22* are derived from tests performed under the ambient temperature and supply voltage conditions summarized in *Table 18: General operating conditions*.

Table 22. Embedded internal reference voltage

Symbol	Parameter	Conditions	Min	Typ	Max	Unit
V_{REFINT}	Internal reference voltage	–40 °C < T_A < +105 °C	1.2	1.23	1.25	V
t_{START}	ADC_IN17 buffer startup time	-	-	-	10(1)	µs
$t_{S_vrefint}$	ADC sampling time when reading the internal reference voltage	-	4(1)	-	-	µs
ΔV_{REFINT}	Internal reference voltage spread over the temperature range	V_{DDA} = 3 V	-	-	10(1)	mV
T_{Coeff}	Temperature coefficient	-	- 100(1)	-	100(1)	ppm/°C

1. Guaranteed by design, not tested in production.

6.3.5 Supply current characteristics

The current consumption is a function of several parameters and factors such as the operating voltage, ambient temperature, I/O pin loading, device software configuration, operating frequencies, I/O pin switching rate, program location in memory and executed binary code.

The current consumption is measured as described in *Figure 13: Current consumption measurement scheme*.

All Run-mode current consumption measurements given in this section are performed with a reduced code that gives a consumption equivalent to CoreMark code.

Typical and maximum current consumption

The MCU is placed under the following conditions:

- All I/O pins are in analog input mode
- All peripherals are disabled except when explicitly mentioned
- The Flash memory access time is adjusted to the f_{HCLK} frequency:
  - 0 wait state and Prefetch OFF from 0 to 24 MHz
  - 1 wait state and Prefetch ON above 24 MHz
- When the peripherals are enabled $f_{PCLK} = f_{HCLK}$

The parameters given in *Table 23Table 23* to *Table 27* are derived from tests performed under ambient temperature and supply voltage conditions summarized in *Table 18: General operating conditions*.

Table 23. Typical and maximum current consumption from V_{DD} at 3.6 V

Symbol	Parameter	Conditions	f_{HCLK}	All peripherals enabled				All peripherals disabled				Unit
				Typ	Max @ T_A(1)			Typ	Max @ T_A(1)			
					25 °C	85 °C	105 °C		25 °C	85 °C	105 °C	
I_{DD}	Supply current in Run mode, code executing from Flash memory	HSE bypass, PLL on	48 MHz	18.4	20.0	20.1	20.4	11.4	12.5	12.5	12.6	mA
			32 MHz	12.4	13.2	13.2	13.8	7.9	8.3	8.5	8.6	
			24 MHz	9.9	10.7	10.7	11.0	6.2	6.8	7.0	7.0	
		HSE bypass, PLL off	8 MHz	3.3	3.6	3.8	3.9	2.2	2.6	2.6	2.6	
			1 MHz	0.8	1.1	1.1	1.1	0.7	0.9	0.9	0.9	
		HSI clock, PLL on	48 MHz	18.9	20.9	21.1	21.5	11.7	12.3	12.9	13.1	
			32 MHz	12.8	13.7	14.2	14.8	8.0	8.7	9.1	9.1	
			24 MHz	9.7	10.4	11.2	11.3	6.1	6.5	6.7	6.9	
		HSI clock, PLL off	8 MHz	3.5	4.0	4.0	4.1	2.4	2.6	2.7	2.7	
	Supply current in Run mode, code executing from RAM	HSE bypass, PLL on	48 MHz	17.3	19.7(2)	19.8	20.0(2)	10.3	11.2(2)	11.3	11.7(2)	
			32 MHz	11.2	12.5	12.7	12.7	6.7	7.3	7.6	7.6	
			24 MHz	8.9	10.0	10.1	10.2	5.1	5.5	5.8	5.9	
		HSE bypass, PLL off	8 MHz	2.8	3.1	3.3	3.4	1.7	2.0	2.1	2.1	
			1 MHz	0.3	0.6	0.6	1.3	0.2	0.5	0.8	0.9	
		HSI clock, PLL on	48 MHz	17.4	19.7	20.0	20.2	10.4	11.2	11.3	11.8	
			32 MHz	11.8	12.8	13.1	13.3	6.8	7.4	7.7	7.9	
			24 MHz	9.0	10.0	10.1	10.2	5.2	5.7	6.0	6.0	
		HSI clock, PLL off	8 MHz	3.0	3.2	3.5	3.6	1.8	2.0	2.2	2.2	

Table 23. Typical and maximum current consumption from V_{DD} at 3.6 V (continued)

Symbol	Parameter	Conditions	f_{HCLK}	All peripherals enabled				All peripherals disabled				Unit
				Typ	Max @ T_A(1)			Typ	Max @ T_A(1)			
					25 °C	85 °C	105 °C		25 °C	85 °C	105 °C	
I_{DD}	Supply current in Sleep mode	HSE bypass, PLL on	48 MHz	10.7	11.7(2)	11.9	12.5(2)	2.4	2.6(2)	2.7	2.9(2)	mA
			32 MHz	7.1	7.8	8.1	8.2	1.6	1.7	1.9	1.9	
			24 MHz	5.5	6.3	6.4	6.4	1.3	1.4	1.5	1.5	
		HSE bypass, PLL off	8 MHz	1.8	2.0	2.0	2.1	0.4	0.4	0.5	0.5	
			1 MHz	0.2	0.5	0.5	0.5	0.1	0.1	0.1	0.1	
		HSI clock, PLL on	48 MHz	10.8	11.9	12.1	12.6	2.4	2.7	2.7	2.9	
			32 MHz	7.3	8.0	8.4	8.5	1.7	1.9	1.9	2.0	
			24 MHz	5.5	6.2	6.5	6.5	1.3	1.5	1.5	1.6	
		HSI clock, PLL off	8 MHz	1.9	2.2	2.3	2.4	0.5	0.5	0.5	0.6	

1. Data based on characterization results, not tested in production unless otherwise specified.
2. Data based on characterization results and tested in production (using one common test limit for sum of I_{DD} and I_{DDA}).

Table 24. Typical and maximum current consumption from the V_{DDA} supply

Symbol	Parameter	Conditions (1)	f_{HCLK}	V_{DDA} = 2.4 V				V_{DDA} = 3.6 V				Unit
				Typ	Max @ T_A(2)			Typ	Max @ T_A(2)			
					25 °C	85 °C	105 °C		25 °C	85 °C	105 °C	
I_{DDA}	Supply current in Run or Sleep mode, code executing from Flash memory or RAM	HSE bypass, PLL on	48 MHz	150	170(3)	178	182(3)	164	183(3)	195	198(3)	µA
			32 MHz	104	121	126	128	113	129	135	138	
			24 MHz	82	96	100	103	88	102	106	108	
		HSE bypass, PLL off	8 MHz	2.0	2.7	3.1	3.3	3.5	3.8	4.1	4.4	
			1 MHz	2.0	2.7	3.1	3.3	3.5	3.8	4.1	4.4	
		HSI clock, PLL on	48 MHz	220	240	248	252	244	263	275	278	
			32 MHz	174	191	196	198	193	209	215	218	
			24 MHz	152	167	173	174	168	183	190	192	
		HSI clock, PLL off	8 MHz	72	79	82	83	83.5	91	94	95	

1. Current consumption from the V_{DDA} supply is independent of whether the digital peripherals are enabled or disabled, being in Run or Sleep mode or executing from Flash memory or RAM. Furthermore, when the PLL is off, I_{DDA} is independent of clock frequencies.
2. Data based on characterization results, not tested in production unless otherwise specified.
3. Data based on characterization results and tested in production (using one common test limit for sum of I_{DD} and I_{DDA}).

Table 25. Typical and maximum current consumption in Stop and Standby modes

Symbol	Parameter	Conditions		Typ @V_{DD} (V_{DD} = V_{DDA})						Max[1]			Unit
				2.0 V	2.4 V	2.7 V	3.0 V	3.3 V	3.6 V	T_A = 25 °C	T_A = 85 °C	T_A = 105 °C	
I_{DD}	Supply current in Stop mode	Regulator in run mode, all oscillators OFF		15	15.1	15.3	15.5	15.7	16	18[2]	38	55[2]	µA
		Regulator in low-power mode, all oscillators OFF		3.2	3.3	3.4	3.5	3.7	4	5.5[2]	22	41[2]	
	Supply current in Standby mode	LSI ON and IWDG ON		0.8	1.0	1.1	1.2	1.4	1.5	-	-	-	
		LSI OFF and IWDG OFF		0.7	0.8	0.9	1.0	1.1	1.3	2[2]	2.5	3[2]	
I_{DDA}	Supply current in Stop mode	V_{DDA} monitoring ON	Regulator in run mode, all oscillators OFF	1.9	2	2.2	2.3	2.5	2.6	3.5[2]	3.5	4.5[2]	
			Regulator in low-power mode, all oscillators OFF	1.9	2	2.2	2.3	2.5	2.6	3.5[2]	3.5	4.5[2]	
	Supply current in Standby mode		LSI ON and IWDG ON	2.3	2.5	2.7	2.9	3.1	3.3	-	-	-	
			LSI OFF and IWDG OFF	1.8	1.9	2	2.2	2.3	2.5	3.5[2]	3.5	4.5[2]	
	Supply current in Stop mode	V_{DDA} monitoring OFF	Regulator in run mode, all oscillators OFF	1.1	1.2	1.2	1.2	1.3	1.4	-	-	-	
			Regulator in low-power mode, all oscillators OFF	1.1	1.2	1.2	1.2	1.3	1.4	-	-	-	
	Supply current in Standby mode		LSI ON and IWDG ON	1.5	1.6	1.7	1.8	1.9	2.0	-	-	-	
			LSI OFF and IWDG OFF	1	1.0	1.1	1.1	1.2	1.2	-	-	-	

1. Data based on characterization results, not tested in production unless otherwise specified.
2. Data based on characterization results and tested in production (using one common test limit for sum of I_{DD} and I_{DDA}).

Table 26. Typical and maximum current consumption from the V_{BAT} supply

Symbol	Parameter	Conditions	Typ @ V_{BAT}						Max(1)			Unit
			1.65 V	1.8 V	2.4 V	2.7 V	3.3 V	3.6 V	T_A = 25 °C	T_A = 85 °C	T_A = 105 °C	
I_{DD_VBAT}	RTC domain supply current	LSE & RTC ON; “Xtal mode”: lower driving capability; LSEDRV[1:0] = '00'	0.5	0.5	0.6	0.7	0.8	0.9	1.0	1.3	1.7	µA
		LSE & RTC ON; “Xtal mode” higher driving capability; LSEDRV[1:0] = '11'	0.8	0.8	0.9	1.0	1.1	1.2	1.3	1.6	2.1	

1. Data based on characterization results, not tested in production.

Typical current consumption

The MCU is placed under the following conditions:

- $V_{DD} = V_{DDA} = 3.3$ V
- All I/O pins are in analog input configuration
- The Flash memory access time is adjusted to f_{HCLK} frequency:
  - 0 wait state and Prefetch OFF from 0 to 24 MHz
  - 1 wait state and Prefetch ON above 24 MHz
- When the peripherals are enabled, $f_{PCLK} = f_{HCLK}$
- PLL is used for frequencies greater than 8 MHz
- AHB prescaler of 2, 4, 8 and 16 is used for the frequencies 4 MHz, 2 MHz, 1 MHz and 500 kHz respectively

Table 27. Typical current consumption, code executing from Flash memory, running from HSE 8 MHz crystal

Symbol	Parameter	f_{HCLK}	Typical run mode		Typical Sleep mode		unit
			Peripherals enabled	Peripherals disabled	Peripherals enabled	Peripherals disabled	-
I_{DD}	Current from V_{DD} supply	48MHz	20.2	12.3	11.1	2.9	mA
		36 MHz	15.3	9.5	8.4	2.4	
		32 MHz	13.6	8.6	7.5	2.2	
		24 MHz	10.5	6.7	5.9	1.8	
		16 MHz	7.2	4.7	4.1	1.4	
		8 MHz	3.8	2.7	2.3	0.9	
		4 MHz	2.4	1.8	1.7	0.9	
		2 MHz	1.6	1.3	1.2	0.8	
		1 MHz	1.2	1.1	1.0	0.8	
		500 kHz	1.0	1.0	0.9	0.8	
I_{DDA}	Current from V_{DDA} supply	48MHz	155				uA
		36 MHz	117				
		32 MHz	105				
		24 MHz	83				
		16 MHz	60				
		8 MHz	2.2				
		4 MHz	2.2				
		2 MHz	2.2				
		1 MHz	2.2				
		500 kHz	2.2				

I/O system current consumption

The current consumption of the I/O system has two components: static and dynamic.

I/O static current consumption

All the I/Os used as inputs with pull-up generate current consumption when the pin is externally held low. The value of this current consumption can be simply computed by using the pull-up/pull-down resistors values given in *Table 46: I/O static characteristics*.

For the output pins, any external pull-down or external load must also be considered to estimate the current consumption.

Additional I/O current consumption is due to I/Os configured as inputs if an intermediate voltage level is externally applied. This current consumption is caused by the input Schmitt

trigger circuits used to discriminate the input value. Unless this specific configuration is required by the application, this supply current consumption can be avoided by configuring these I/Os in analog mode. This is notably the case of ADC input pins which should be configured as analog inputs.

Caution: Any floating input pin can also settle to an intermediate voltage level or switch inadvertently, as a result of external electromagnetic noise. To avoid current consumption related to floating pins, they must either be configured in analog mode, or forced internally to a definite digital value. This can be done either by using pull-up/down resistors or by configuring the pins in output mode.

I/O dynamic current consumption

In addition to the internal peripheral current consumption measured previously (see *Table 29: Peripheral current consumption*), the I/Os used by an application also contribute to the current consumption. When an I/O pin switches, it uses the current from the I/O supply voltage to supply the I/O pin circuitry and to charge/discharge the capacitive load (internal or external) connected to the pin:

$$I_{SW} = V_{DDIOx} \times f_{SW} \times C$$

where

I_{SW} is the current sunk by a switching I/O to charge/discharge the capacitive load

V_{DDIOx} is the I/O supply voltage

f_{SW} is the I/O switching frequency

C is the total capacitance seen by the I/O pin: $C = C_{INT} + C_{EXT} + C_S$

C_S is the PCB board capacitance including the pad pin.

The test pin is configured in push-pull output mode and is toggled by software at a fixed frequency.

Table 28. Switching output I/O current consumption

Symbol	Parameter	Conditions[1]	I/O toggling frequency (f_{SW})	Typ	Unit
I_{SW}	I/O current consumption	V_{DDIOx} = 3.3 V C =C_{INT}	4 MHz	0.07	mA
			8 MHz	0.15	
			16 MHz	0.31	
			24 MHz	0.53	
			48 MHz	0.92	
		V_{DDIOx} = 3.3 V C_{EXT} = 0 pF C = C_{INT} + C_{EXT}+ C_S	4 MHz	0.18	
			8 MHz	0.37	
			16 MHz	0.76	
			24 MHz	1.39	
			48 MHz	2.188	
		V_{DDIOx} = 3.3 V C_{EXT} = 10 pF C = C_{INT} + C_{EXT}+ C_S	4 MHz	0.32	
			8 MHz	0.64	
			16 MHz	1.25	
			24 MHz	2.23	
			48 MHz	4.442	
		V_{DDIOx} = 3.3 V C_{EXT} = 22 pF C = C_{INT} + C_{EXT}+ C_S	4 MHz	0.49	
			8 MHz	0.94	
			16 MHz	2.38	
			24 MHz	3.99	
		V_{DDIOx} = 3.3 V C_{EXT} = 33 pF C = C_{INT} + C_{EXT}+ C_S	4 MHz	0.64	
			8 MHz	1.25	
			16 MHz	3.24	
			24 MHz	5.02	
		V_{DDIOx} = 3.3 V C_{EXT} = 47 pF C = C_{INT} + C_{EXT}+ C_S C = C_{int}	4 MHz	0.81	
			8 MHz	1.7	
			16 MHz	3.67	
		V_{DDIOx} = 2.4 V C_{EXT} = 47 pF C = C_{INT} + C_{EXT}+ C_S C = C_{int}	4 MHz	0.66	
			8 MHz	1.43	
			16 MHz	2.45	
			24 MHz	4.97	

1. C_S = 7 pF (estimated value).

On-chip peripheral current consumption

The current consumption of the on-chip peripherals is given in *Table 29*. The MCU is placed under the following conditions:

- All I/O pins are in analog mode
- All peripherals are disabled unless otherwise mentioned
- The given value is calculated by measuring the current consumption
  - with all peripherals clocked off
  - with only one peripheral clocked on
- Ambient operating temperature and supply voltage conditions summarized in *Table 15: Voltage characteristics*
- The power consumption of the digital part of the on-chip peripherals is given in *Table 29*. The power consumption of the analog part of the peripherals (where applicable) is indicated in each related section of the datasheet.

Table 29. Peripheral current consumption

Peripheral		Typical consumption at 25 °C	Unit
AHB	BusMatrix(1)	3.8	µA/MHz
	DMA1	6.3	
	SRAM	0.7	
	Flash memory interface	15.2	
	CRC	1.61	
	GPIOA	9.4	
	GPIOB	11.6	
	GPIOC	1.9	
	GPIOF	0.8	
	All AHB peripherals	**47.5**	

Table 29. Peripheral current consumption (continued)

Peripheral		Typical consumption at 25 °C	Unit
APB	APB-Bridge (2)	2.6	µA/MHz
	SYSCFG	1.7	
	ADC (3)	4.2	
	TIM1	17.1	
	SPI1	9.6	
	USART1	17.4	
	TIM16	8.2	
	TIM17	8.0	
	DBG (MCU Debug Support)	0.5	
	TIM2	17.4	
	TIM3	12.8	
	TIM14	6.0	
	WWDG	1.5	
	I2C1	5.1	
	PWR	1.2	
	All APB peripherals	**110.9**	

1. The BusMatrix automatically is active when at least one master is ON (CPU or DMA1).
2. The APBx Bridge is automatically active when at least one peripheral is ON on the same Bus.
3. The power consumption of the analog part (I_{DDA}) of peripherals such as ADC is not included. Refer to the tables of characteristics in the subsequent sections.

6.3.6 Wakeup time from low-power mode

The wakeup times given in *Table 30* are the latency between the event and the execution of the first user instruction. The device goes in low-power mode after the WFE (Wait For Event) instruction, in the case of a WFI (Wait For Interruption) instruction, 16 CPU cycles must be added to the following timings due to the interrupt latency in the Cortex M0 architecture.

The SYSCLK clock source setting is kept unchanged after wakeup from Sleep mode. During wakeup from Stop or Standby mode, SYSCLK takes the default setting: HSI 8 MHz.

The wakeup source from Sleep and Stop mode is an EXTI line configured in event mode. The wakeup source from Standby mode is the WKUP1 pin (PA0).

All timings are derived from tests performed under the ambient temperature and supply voltage conditions summarized in *Table 18: General operating conditions*..

Table 30. Low-power mode wakeup timings

Symbol	Parameter	Conditions	Typ @V_{DD} = V_{DDA}					Max	Unit
			= 2.0 V	= 2.4 V	= 2.7 V	= 3 V	= 3.3 V		
t_{WUSTOP}	Wakeup from Stop mode	Regulator in run mode	3.2	3.1	2.9	2.9	2.8	5	µs
		Regulator in low power mode	7.0	5.8	5.2	4.9	4.6	9	
$t_{WUSTANDBY}$	Wakeup from Standby mode	-	60.4	55.6	53.5	52	51	-	
$t_{WUSLEEP}$	Wakeup from Sleep mode	-	4 SYSCLK cycles					-	

6.3.7 External clock source characteristics

High-speed external user clock generated from an external source

In bypass mode the HSE oscillator is switched off and the input pin is a standard GPIO.

The external clock signal has to respect the I/O characteristics in *Section 6.3.14*. However, the recommended clock input waveform is shown in *Figure 14: High-speed external clock source AC timing diagram*.

Table 31. High-speed external user clock characteristics

Symbol	Parameter(1)	Min	Typ	Max	Unit
f_{HSE_ext}	User external clock source frequency	-	8	32	MHz
V_{HSEH}	OSC_IN input pin high level voltage	0.7 V_{DDIOx}	-	V_{DDIOx}	V
V_{HSEL}	OSC_IN input pin low level voltage	V_{SS}	-	0.3 V_{DDIOx}	
$t_{w(HSEH)}$ $t_{w(HSEL)}$	OSC_IN high or low time	15	-	-	ns
$t_{r(HSE)}$ $t_{f(HSE)}$	OSC_IN rise or fall time	-	-	20	

1. Guaranteed by design, not tested in production.

Figure 14. High-speed external clock source AC timing diagram

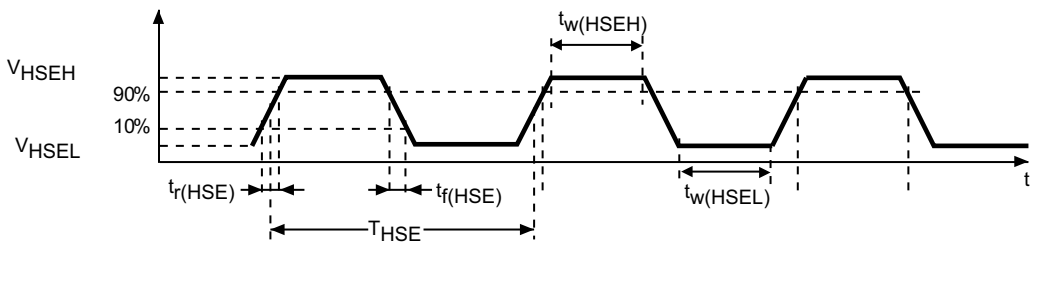

Low-speed external user clock generated from an external source

In bypass mode the LSE oscillator is switched off and the input pin is a standard GPIO.

The external clock signal has to respect the I/O characteristics in *Section 6.3.14*. However, the recommended clock input waveform is shown in *Figure 15*.

Table 32. Low-speed external user clock characteristics

Symbol	Parameter[1]	Min	Typ	Max	Unit
f_{LSE_ext}	User external clock source frequency	-	32.768	1000	kHz
V_{LSEH}	OSC32_IN input pin high level voltage	0.7 V_{DDIOx}	-	V_{DDIOx}	V
V_{LSEL}	OSC32_IN input pin low level voltage	V_{SS}	-	0.3 V_{DDIOx}	
$t_{w(LSEH)}$ $t_{w(LSEL)}$	OSC32_IN high or low time	450	-	-	ns
$t_{r(LSE)}$ $t_{f(LSE)}$	OSC32_IN rise or fall time	-	-	50	

1. Guaranteed by design, not tested in production.

Figure 15. Low-speed external clock source AC timing diagram

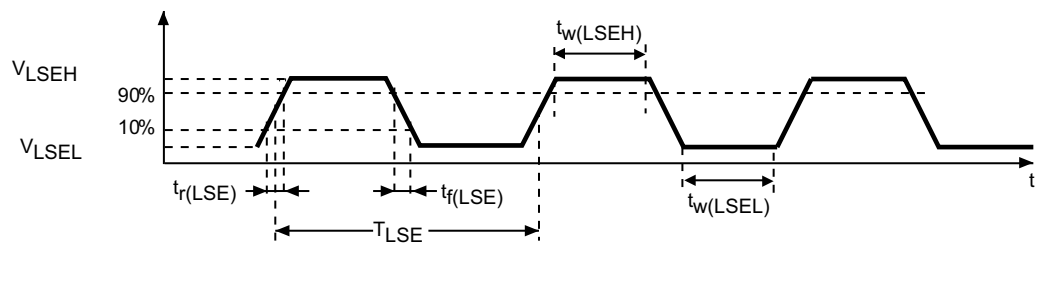

High-speed external clock generated from a crystal/ceramic resonator

The high-speed external (HSE) clock can be supplied with a 4 to 32 MHz crystal/ceramic resonator oscillator. All the information given in this paragraph are based on design simulation results obtained with typical external components specified in *Table 33*. In the application, the resonator and the load capacitors have to be placed as close as possible to the oscillator pins in order to minimize output distortion and startup stabilization time. Refer to the crystal resonator manufacturer for more details on the resonator characteristics (frequency, package, accuracy).

Table 33. HSE oscillator characteristics

Symbol	Parameter	Conditions[1]	Min[2]	Typ	Max[2]	Unit
f_{OSC_IN}	Oscillator frequency	-	4	8	32	MHz
R_F	Feedback resistor	-	-	200	-	kΩ
I_{DD}	HSE current consumption	During startup[3]	-	-	8.5	mA
		V_{DD} = 3.3 V, Rm = 30 Ω, CL = 10 pF@8 MHz	-	0.4	-	
		V_{DD} = 3.3 V, Rm = 45 Ω, CL = 10 pF@8 MHz	-	0.5	-	
		V_{DD} = 3.3 V, Rm = 30 Ω, CL = 5 pF@32 MHz	-	0.8	-	
		V_{DD} = 3.3 V, Rm = 30 Ω, CL = 10 pF@32 MHz	-	1	-	
		V_{DD} = 3.3 V, Rm = 30 Ω, CL = 20 pF@32 MHz	-	1.5	-	
g_m	Oscillator transconductance	Startup	10	-	-	mA/V
$t_{SU(HSE)}$[4]	Startup time	V_{DD} is stabilized	-	2	-	ms

1. Resonator characteristics given by the crystal/ceramic resonator manufacturer.
2. Guaranteed by design, not tested in production.
3. This consumption level occurs during the first 2/3 of the $t_{SU(HSE)}$ startup time
4. $t_{SU(HSE)}$ is the startup time measured from the moment it is enabled (by software) to a stabilized 8 MHz oscillation is reached. This value is measured for a standard crystal resonator and it can vary significantly with the crystal manufacturer

For C_{L1} and C_{L2}, it is recommended to use high-quality external ceramic capacitors in the 5 pF to 20 pF range (Typ.), designed for high-frequency applications, and selected to match the requirements of the crystal or resonator (see *Figure 16*). C_{L1} and C_{L2} are usually the same size. The crystal manufacturer typically specifies a load capacitance which is the series combination of C_{L1} and C_{L2}. PCB and MCU pin capacitance must be included (10 pF can be used as a rough estimate of the combined pin and board capacitance) when sizing C_{L1} and C_{L2}.

Note: For information on selecting the crystal, refer to the application note AN2867 "Oscillator design guide for ST microcontrollers" available from the ST website www.st.com.

Figure 16. Typical application with an 8 MHz crystal

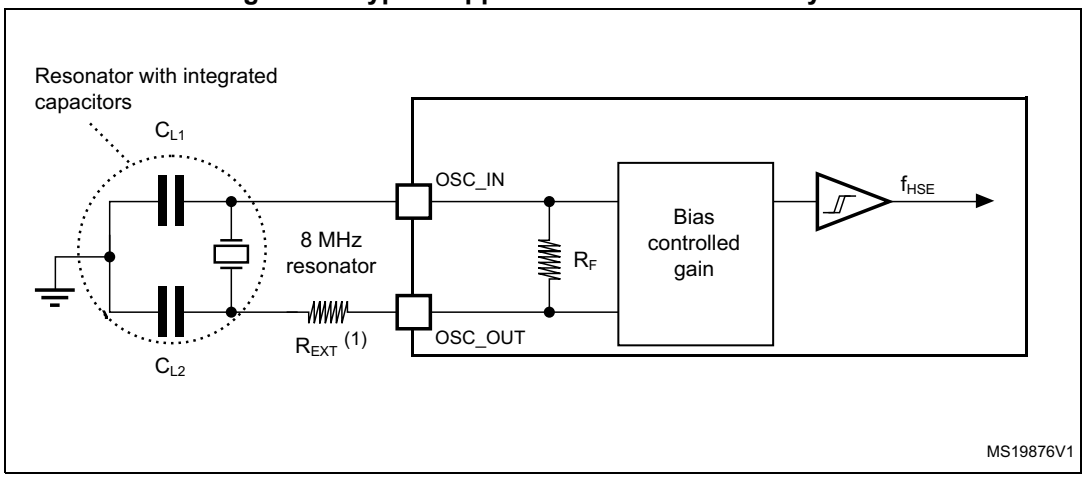

1. R_{EXT} value depends on the crystal characteristics.

Low-speed external clock generated from a crystal resonator

The low-speed external (LSE) clock can be supplied with a 32.768 kHz crystal resonator oscillator. All the information given in this paragraph are based on design simulation results obtained with typical external components specified in *Table 34*. In the application, the resonator and the load capacitors have to be placed as close as possible to the oscillator pins in order to minimize output distortion and startup stabilization time. Refer to the crystal resonator manufacturer for more details on the resonator characteristics (frequency, package, accuracy).

Table 34. LSE oscillator characteristics (f_{LSE} = 32.768 kHz)

Symbol	Parameter	Conditions(1)	Min(2)	Typ	Max(2)	Unit
I_{DD}	LSE current consumption	low drive capability	-	0.5	0.9	µA
		medium-low drive capability	-	-	1	
		medium-high drive capability	-	-	1.3	
		high drive capability	-	-	1.6	
g_m	Oscillator transconductance	low drive capability	5	-	-	µA/V
		medium-low drive capability	8	-	-	
		medium-high drive capability	15	-	-	
		high drive capability	25	-	-	
$t_{SU(LSE)}$(3)	Startup time	V_{DDIOx} is stabilized	-	2	-	s

1. Refer to the note and caution paragraphs below the table, and to the application note AN2867 “Oscillator design guide for ST microcontrollers”.
2. Guaranteed by design, not tested in production.
3. $t_{SU(LSE)}$ is the startup time measured from the moment it is enabled (by software) to a stabilized 32.768 kHz oscillation is reached. This value is measured for a standard crystal and it can vary significantly with the crystal manufacturer

Note: For information on selecting the crystal, refer to the application note AN2867 "Oscillator design guide for ST microcontrollers" available from the ST website www.st.com.

Figure 17. Typical application with a 32.768 kHz crystal

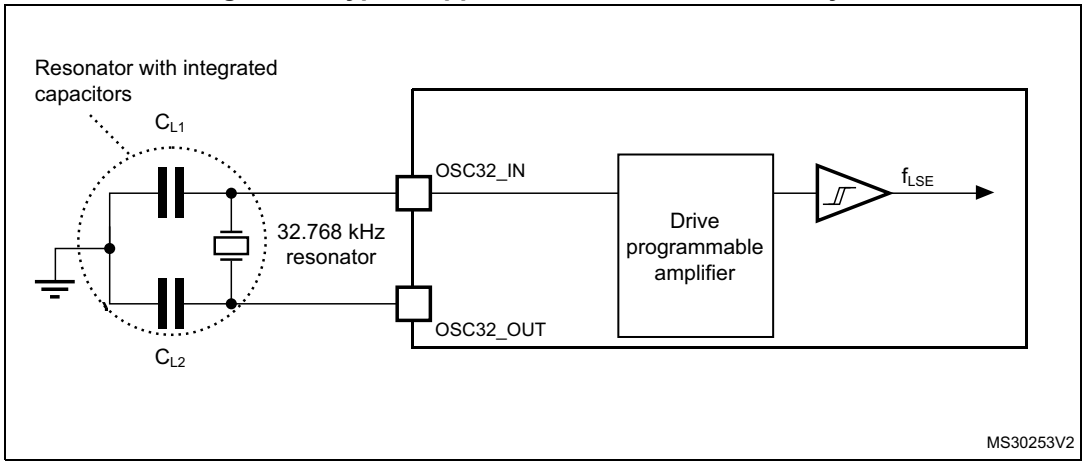

Note: An external resistor is not required between OSC32_IN and OSC32_OUT and it is forbidden to add one.

6.3.8 Internal clock source characteristics

The parameters given in *Table 35* are derived from tests performed under ambient temperature and supply voltage conditions summarized in *Table 18: General operating conditions*. The provided curves are characterization results, not tested in production.

High-speed internal (HSI) RC oscillator

Table 35. HSI oscillator characteristics(1)

Symbol	Parameter	Conditions	Min	Typ	Max	Unit
f_{HSI}	Frequency	-	-	8	-	MHz
TRIM	HSI user trimming step	-	-	-	1(2)	%
$DuCy_{(HSI)}$	Duty cycle	-	45(2)	-	55(2)	%
ACC_{HSI}	Accuracy of the HSI oscillator	T_A = -40 to 105°C	-2.8(3)	-	3.8(3)	%
		T_A = -10 to 85°C	-1.9(3)	-	2.3(3)	
		T_A = 0 to 85°C	-1.9(3)	-	2(3)	
		T_A = 0 to 70°C	-1.3(3)	-	2(3)	
		T_A = 0 to 55°C	-1(3)	-	2(3)	
		T_A = 25°C(4)	-1	-	1	
$t_{su(HSI)}$	HSI oscillator startup time	-	1(2)	-	2(2)	µs
$I_{DDA(HSI)}$	HSI oscillator power consumption	-	-	80	100(2)	µA

1. V_{DDA} = 3.3 V, T_A = -40 to 105°C unless otherwise specified.
2. Guaranteed by design, not tested in production.
3. Data based on characterization results, not tested in production.
4. Factory calibrated, parts not soldered.

Figure 18. HSI oscillator accuracy characterization results for soldered parts

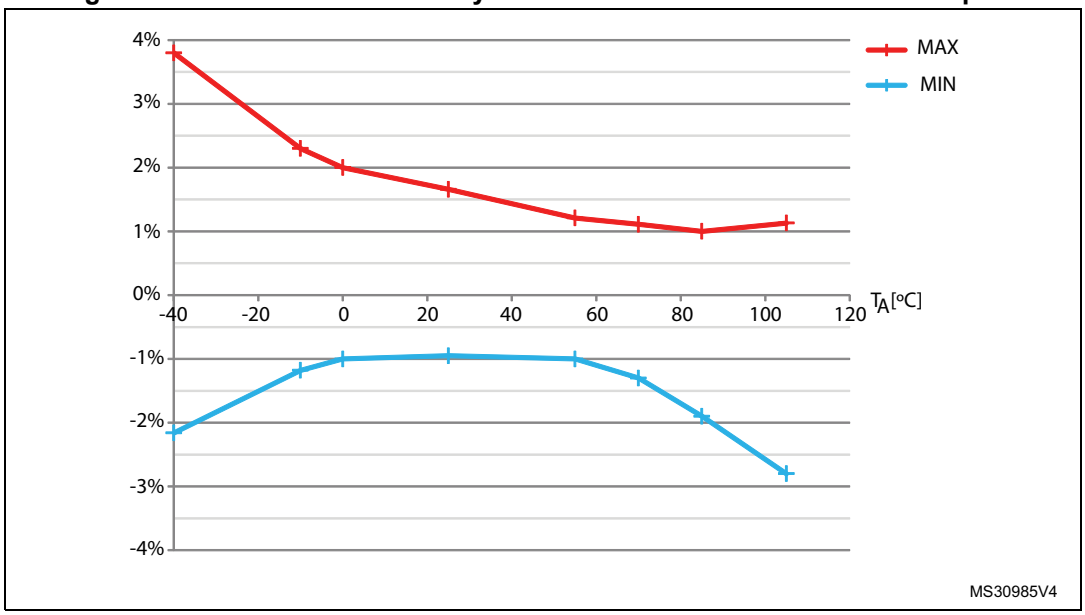

High-speed internal 14 MHz (HSI14) RC oscillator (dedicated to ADC)

Table 36. HSI14 oscillator characteristics(1)

Symbol	Parameter	Conditions	Min	Typ	Max	Unit
f_{HSI14}	Frequency	-	-	14	-	MHz
TRIM	HSI14 user-trimming step	-	-	-	1(2)	%
$DuCy_{(HSI14)}$	Duty cycle	-	45(2)	-	55(2)	%
ACC_{HSI14}	Accuracy of the HSI14 oscillator (factory calibrated)	T_A = –40 to 105 °C	–4.2(3)	-	5.1(3)	%
		T_A = –10 to 85 °C	–3.2(3)	-	3.1(3)	%
		T_A = 0 to 70 °C	–2.5(3)	-	2.3(3)	%
		T_A = 25 °C	–1	-	1	%
$t_{su(HSI14)}$	HSI14 oscillator startup time	-	1(2)	-	2(2)	µs
$I_{DDA(HSI14)}$	HSI14 oscillator power consumption	-	-	100	150(2)	µA

1. V_{DDA} = 3.3 V, T_A = –40 to 105 °C unless otherwise specified.
2. Guaranteed by design, not tested in production.
3. Data based on characterization results, not tested in production.

Figure 19. HSI14 oscillator accuracy characterization results

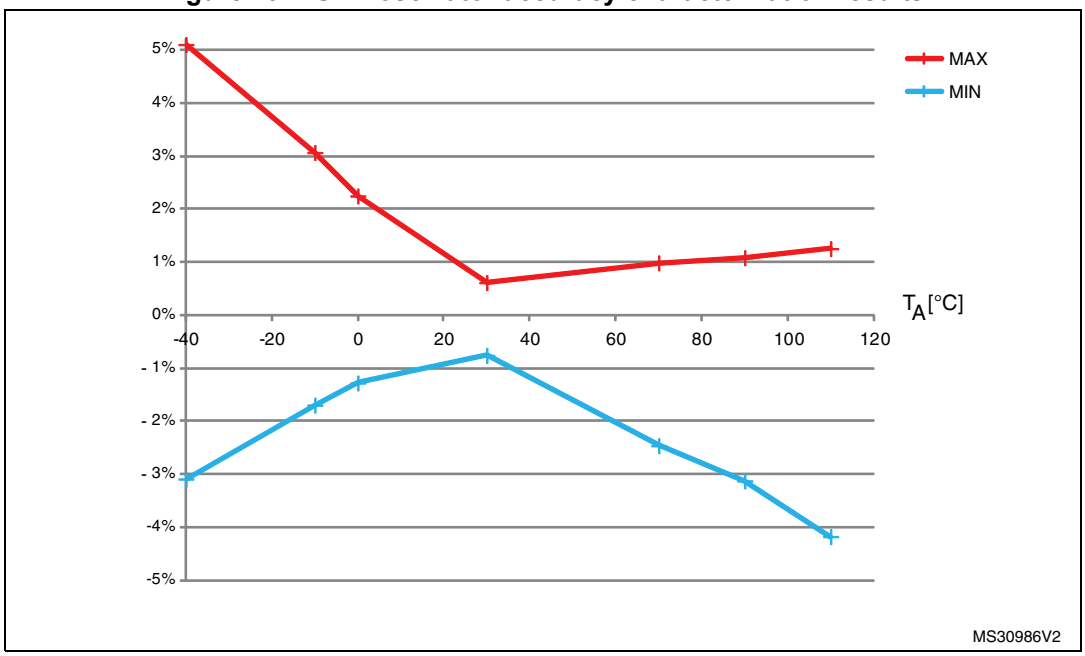

Low-speed internal (LSI) RC oscillator

Table 37. LSI oscillator characteristics(1)

Symbol	Parameter	Min	Typ	Max	Unit
f_{LSI}	Frequency	30	40	50	kHz
$t_{su(LSI)}$(2)	LSI oscillator startup time	-	-	85	µs
$I_{DDA(LSI)}$(2)	LSI oscillator power consumption	-	0.75	1.2	µA

1. V_{DDA} = 3.3 V, T_A = –40 to 105 °C unless otherwise specified.
2. Guaranteed by design, not tested in production.

6.3.9 PLL characteristics

The parameters given in *Table 38* are derived from tests performed under ambient temperature and supply voltage conditions summarized in *Table 18: General operating conditions*.

Table 38. PLL characteristics

Symbol	Parameter	Value			Unit
		Min	Typ	Max	
f_{PLL_IN}	PLL input clock(1)	1(2)	8.0	24(2)	MHz
	PLL input clock duty cycle	40(2)	-	60(2)	%
f_{PLL_OUT}	PLL multiplier output clock	16(2)	-	48	MHz
t_{LOCK}	PLL lock time	-	-	200(2)	µs
$Jitter_{PLL}$	Cycle-to-cycle jitter	-	-	300(2)	ps

1. Take care to use the appropriate multiplier factors to obtain PLL input clock values compatible with the range defined by f_{PLL_OUT}.
2. Guaranteed by design, not tested in production.

6.3.10 Memory characteristics

Flash memory

The characteristics are given at T_A = –40 to 105 °C unless otherwise specified.

Table 39. Flash memory characteristics

Symbol	Parameter	Conditions	Min	Typ	Max(1)	Unit
t_{prog}	16-bit programming time	T_A = - 40 to +105 °C	40	53.5	60	µs
t_{ERASE}	Page (1 KB) erase time	T_A = - 40 to +105 °C	20	-	40	ms
t_{ME}	Mass erase time	T_A = - 40 to +105 °C	20	-	40	ms
I_{DD}	Supply current	Write mode	-	-	10	mA
		Erase mode	-	-	12	mA

1. Guaranteed by design, not tested in production.

Table 40. Flash memory endurance and data retention

Symbol	Parameter	Conditions	Min(1)	Unit
N_{END}	Endurance	T_A = –40 to +105 °C	10	kcycle
t_{RET}	Data retention	1 kcycle(2) at T_A = 85 °C	30	Year
		1 kcycle(2) at T_A = 105 °C	10	
		10 kcycle(2) at T_A = 55 °C	20	

1. Data based on characterization results, not tested in production.
2. Cycling performed over the whole temperature range.

6.3.11 EMC characteristics

Susceptibility tests are performed on a sample basis during device characterization.

Functional EMS (electromagnetic susceptibility)

While a simple application is executed on the device (toggling 2 LEDs through I/O ports). the device is stressed by two electromagnetic events until a failure occurs. The failure is indicated by the LEDs:

- **Electrostatic discharge (ESD)** (positive and negative) is applied to all device pins until a functional disturbance occurs. This test is compliant with the IEC 61000-4-2 standard.
- **FTB**: A Burst of Fast Transient voltage (positive and negative) is applied to V_{DD} and V_{SS} through a 100 pF capacitor, until a functional disturbance occurs. This test is compliant with the IEC 61000-4-4 standard.

A device reset allows normal operations to be resumed.

The test results are given in *Table 41*. They are based on the EMS levels and classes defined in application note AN1709.

Table 41. EMS characteristics

Symbol	Parameter	Conditions	Level/ Class
V_{FESD}	Voltage limits to be applied on any I/O pin to induce a functional disturbance	V_{DD} = 3.3 V, LQFP48, T_A = +25 °C, f_{HCLK} = 48 MHz, conforming to IEC 61000-4-2	2B
V_{EFTB}	Fast transient voltage burst limits to be applied through 100 pF on V_{DD} and V_{SS} pins to induce a functional disturbance	V_{DD} = 3.3 V, LQFP48, T_A = +25°C, f_{HCLK} = 48 MHz, conforming to IEC 61000-4-4	4B

Designing hardened software to avoid noise problems

EMC characterization and optimization are performed at component level with a typical application environment and simplified MCU software. It should be noted that good EMC performance is highly dependent on the user application and the software in particular.

Therefore it is recommended that the user applies EMC software optimization and prequalification tests in relation with the EMC level requested for his application.

Software recommendations

The software flowchart must include the management of runaway conditions such as:

- Corrupted program counter
- Unexpected reset
- Critical Data corruption (for example control registers)

Prequalification trials

Most of the common failures (unexpected reset and program counter corruption) can be reproduced by manually forcing a low state on the NRST pin or the Oscillator pins for 1 second.

To complete these trials, ESD stress can be applied directly on the device, over the range of specification values. When unexpected behavior is detected, the software can be hardened to prevent unrecoverable errors occurring (see application note AN1015).

Electromagnetic Interference (EMI)

The electromagnetic field emitted by the device are monitored while a simple application is executed (toggling 2 LEDs through the I/O ports). This emission test is compliant with IEC 61967-2 standard which specifies the test board and the pin loading.

Table 42. EMI characteristics

Symbol	Parameter	Conditions	Monitored frequency band	Max vs. [f_{HSE}/f_{HCLK}]	Unit
				8/48 MHz	
S_{EMI}	Peak level	V_{DD} = 3.6 V, T_A = 25 °C, LQFP48 package compliant with IEC 61967-2	0.1 to 30 MHz	-11	dBµV
			30 to 130 MHz	21	
			130 MHz to 1 GHz	21	
			EMI Level	4	-

6.3.12 Electrical sensitivity characteristics

Based on three different tests (ESD, LU) using specific measurement methods, the device is stressed in order to determine its performance in terms of electrical sensitivity.

Electrostatic discharge (ESD)

Electrostatic discharges (a positive then a negative pulse separated by 1 second) are applied to the pins of each sample according to each pin combination. The sample size depends on the number of supply pins in the device (3 parts × (n+1) supply pins). This test conforms to the JESD22-A114/C101 standard.

Table 43. ESD absolute maximum ratings

Symbol	Ratings	Conditions	Packages	Class	Maximum value(1)	Unit
$V_{ESD(HBM)}$	Electrostatic discharge voltage (human body model)	T_A = +25 °C, conforming to JESD22-A114	All	2	2000	V
$V_{ESD(CDM)}$	Electrostatic discharge voltage (charge device model)	T_A = +25 °C, conforming to ANSI/ESD STM5.3.1	All	C3	250	V

1. Data based on characterization results, not tested in production.

Static latch-up

Two complementary static tests are required on six parts to assess the latch-up performance:

- A supply overvoltage is applied to each power supply pin.
- A current injection is applied to each input, output and configurable I/O pin.

These tests are compliant with EIA/JESD 78A IC latch-up standard.

Table 44. Electrical sensitivities

Symbol	Parameter	Conditions	Class
LU	Static latch-up class	T_A = +105 °C conforming to JESD78A	II level A

6.3.13 I/O current injection characteristics

As a general rule, current injection to the I/O pins, due to external voltage below V_{SS} or above V_{DDIOx} (for standard, 3.3 V-capable I/O pins) should be avoided during normal product operation. However, in order to give an indication of the robustness of the microcontroller in cases when abnormal injection accidentally happens, susceptibility tests are performed on a sample basis during device characterization.

Functional susceptibility to I/O current injection

While a simple application is executed on the device, the device is stressed by injecting current into the I/O pins programmed in floating input mode. While current is injected into the I/O pin, one at a time, the device is checked for functional failures.

The failure is indicated by an out of range parameter: ADC error above a certain limit (higher than 5 LSB TUE), out of conventional limits of induced leakage current on adjacent pins (out of the -5 µA/+0 µA range) or other functional failure (for example reset occurrence or oscillator frequency deviation).

The characterization results are given in *Table 45*.

Negative induced leakage current is caused by negative injection and positive induced leakage current is caused by positive injection.

Table 45. I/O current injection susceptibility

Symbol	Description	Functional susceptibility		Unit
		Negative injection	Positive injection	
I_{INJ}	Injected current on BOOT0	–0	NA	mA
	Injected current on all FT and FTf pins	–5	NA	
	Injected current on all TTa, TC and RESET pins	–5	+5	

6.3.14 I/O port characteristics

General input/output characteristics

Unless otherwise specified, the parameters given in *Table 46* are derived from tests performed under the conditions summarized in *Table 18: General operating conditions*. All I/Os are designed as CMOS- and TTL-compliant (except BOOT0).

Table 46. I/O static characteristics

Symbol	Parameter	Conditions	Min	Typ	Max	Unit
V_{IL}	Low level input voltage	TC and TTa I/O	-	-	0.3 V_{DDIOx}+0.07(1)	V
		FT and FTf I/O	-	-	0.475 V_{DDIOx}–0.2(1)	
		BOOT0	-	-	0.3 V_{DDIOx}–0.3(1)	
		All I/Os except BOOT0 pin	-	-	0.3 V_{DDIOx}	
V_{IH}	High level input voltage	TC and TTa I/O	0.445 V_{DDIOx}+0.398(1)	-	-	V
		FT and FTf I/O	0.5 V_{DDIOx}+0.2(1)	-	-	
		BOOT0	0.2 V_{DDIOx}+0.95(1)	-	-	
		All I/Os except BOOT0 pin	0.7 V_{DDIOx}	-	-	
V_{hys}	Schmitt trigger hysteresis	TC and TTa I/O	-	200(1)	-	mV
		FT and FTf I/O	-	100(1)	-	
		BOOT0	-	300(1)	-	
I_{lkg}	Input leakage current(2)	TC, FT and FTf I/O TTa in digital mode $V_{SS} \le V_{IN} \le V_{DDIOx}$	-	-	± 0.1	µA
		TTa in digital mode $V_{DDIOx} \le V_{IN} \le V_{DDA}$	-	-	1	
		TTa in analog mode $V_{SS} \le V_{IN} \le V_{DDA}$	-	-	± 0.2	
		FT and FTf I/O $V_{DDIOx} \le V_{IN} \le 5$ V	-	-	10	

Table 46. I/O static characteristics (continued)

Symbol	Parameter	Conditions	Min	Typ	Max	Unit
R_{PU}	Weak pull-up equivalent resistor (3)	$V_{IN} = V_{SS}$	25	40	55	kΩ
R_{PD}	Weak pull-down equivalent resistor(3)	$V_{IN} = - V_{DDIOx}$	25	40	55	kΩ
C_{IO}	I/O pin capacitance	-	-	5	-	pF

1. Data based on design simulation only. Not tested in production.
2. The leakage could be higher than the maximum value, if negative current is injected on adjacent pins. Refer to *Table 45: I/O current injection susceptibility*.
3. Pull-up and pull-down resistors are designed with a true resistance in series with a switchable PMOS/NMOS. This PMOS/NMOS contribution to the series resistance is minimal (~10% order).

All I/Os are CMOS- and TTL-compliant (no software configuration required). Their characteristics cover more than the strict CMOS-technology or TTL parameters. The coverage of these requirements is shown in *Figure 20* for standard I/Os, and in *Figure 21* for 5 V-tolerant I/Os. The following curves are design simulation results, not tested in production.

Figure 20. TC and TTa I/O input characteristics

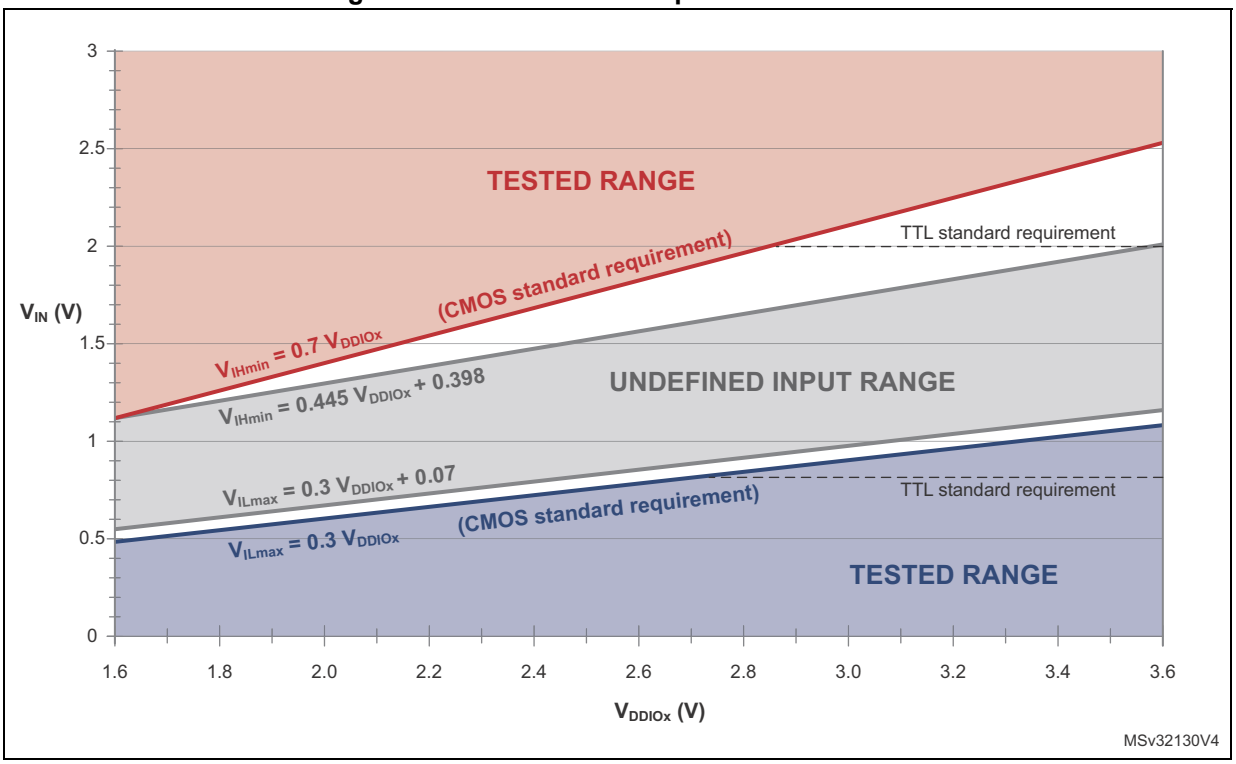

Figure 21. Five volt tolerant (FT and FTf) I/O input characteristics

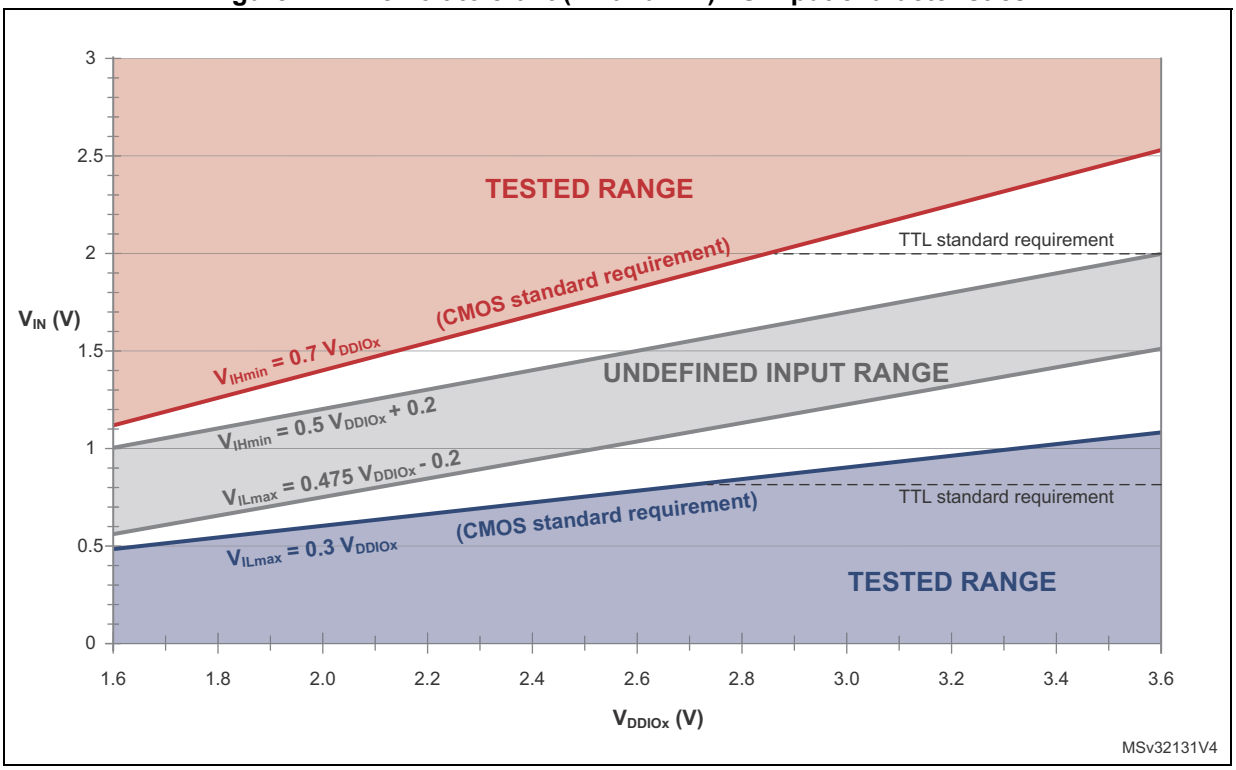

Output driving current

The GPIOs (general purpose input/outputs) can sink or source up to +/-8 mA, and sink or source up to +/- 20 mA (with a relaxed V_{OL}/V_{OH}).

In the user application, the number of I/O pins which can drive current must be limited to respect the absolute maximum rating specified in *Section 6.2*:

- The sum of the currents sourced by all the I/Os on V_{DDIOx}, plus the maximum consumption of the MCU sourced on V_{DD}, cannot exceed the absolute maximum rating ΣI_{VDD} (see *Table 15: Voltage characteristics*).
- The sum of the currents sunk by all the I/Os on V_{SS}, plus the maximum consumption of the MCU sunk on V_{SS}, cannot exceed the absolute maximum rating ΣI_{VSS} (see *Table 15: Voltage characteristics*).

Output voltage levels

Unless otherwise specified, the parameters given in the table below are derived from tests performed under the ambient temperature and supply voltage conditions summarized in *Table 18: General operating conditions*. All I/Os are CMOS- and TTL-compliant (FT, TTa or TC unless otherwise specified).

Table 47. Output voltage characteristics(1)

Symbol	Parameter	Conditions	Min	Max	Unit
V_{OL}	Output low level voltage for an I/O pin	CMOS port(2) $\lvert I_{IO}\rvert$ = 8 mA $V_{DDIOx} \geq 2.7$ V	-	0.4	V
V_{OH}	Output high level voltage for an I/O pin		V_{DDIOx}–0.4	-	
V_{OL}	Output low level voltage for an I/O pin	TTL port(2) $\lvert I_{IO}\rvert$ = 8 mA $V_{DDIOx} \geq 2.7$ V	-	0.4	V
V_{OH}	Output high level voltage for an I/O pin		2.4	-	
V_{OL}(3)	Output low level voltage for an I/O pin	$\lvert I_{IO}\rvert$ = 20 mA $V_{DDIOx} \geq 2.7$ V	-	1.3	V
V_{OH}(3)	Output high level voltage for an I/O pin		V_{DDIOx}–1.3	-	
V_{OL}(3)	Output low level voltage for an I/O pin	$\lvert I_{IO}\rvert$ = 6 mA	-	0.4	V
V_{OH}(3)	Output high level voltage for an I/O pin		V_{DDIOx}–0.4	-	
V_{OLFm+}(3)	Output low level voltage for an FTf I/O pin in Fm+ mode	$\lvert I_{IO}\rvert$ = 20 mA $V_{DDIOx} \geq 2.7$ V	-	0.4	V
		$\lvert I_{IO}\rvert$ = 10 mA	-	0.4	V

1. The I_{IO} current sourced or sunk by the device must always respect the absolute maximum rating specified in *Table 15: Voltage characteristics*, and the sum of the currents sourced or sunk by all the I/Os (I/O ports and control pins) must always respect the absolute maximum ratings ΣI_{IO}.
2. TTL and CMOS outputs are compatible with JEDEC standards JESD36 and JESD52.
3. Data based on characterization results. Not tested in production.

Input/output AC characteristics

The definition and values of input/output AC characteristics are given in *Figure 22* and *Table 48*, respectively. Unless otherwise specified, the parameters given are derived from tests performed under the ambient temperature and supply voltage conditions summarized in *Table 18: General operating conditions*.

Table 48. I/O AC characteristics(1)(2)

OSPEEDRy [1:0] value(1)	Symbol	Parameter	Conditions	Min	Max	Unit
x0	$f_{max(IO)out}$	Maximum frequency(3)	C_L = 50 pF	-	2	MHz
	$t_{f(IO)out}$	Output fall time		-	125	ns
	$t_{r(IO)out}$	Output rise time		-	125	
01	$f_{max(IO)out}$	Maximum frequency(3)	C_L = 50 pF	-	10	MHz
	$t_{f(IO)out}$	Output fall time		-	25	ns
	$t_{r(IO)out}$	Output rise time		-	25	
11	$f_{max(IO)out}$	Maximum frequency(3)	C_L = 30 pF, $V_{DDIOx} \geq 2.7$ V	-	50	MHz
			C_L = 50 pF, $V_{DDIOx} \geq 2.7$ V	-	30	
			C_L = 50 pF, $V_{DDIOx} < 2.7$ V	-	20	
	$t_{f(IO)out}$	Output fall time	C_L = 30 pF, $V_{DDIOx} \geq 2.7$ V	-	5	ns
			C_L = 50 pF, $V_{DDIOx} \geq 2.7$ V	-	8	
			C_L = 50 pF, $V_{DDIOx} < 2.7$ V	-	12	
	$t_{r(IO)out}$	Output rise time	C_L = 30 pF, $V_{DDIOx} \geq 2.7$ V	-	5	
			C_L = 50 pF, $V_{DDIOx} \geq 2.7$ V	-	8	
			C_L = 50 pF, $V_{DDIOx} < 2.7$ V	-	12	
Fm+ configuration(4)	$f_{max(IO)out}$	Maximum frequency(3)	C_L = 50 pF	-	2	MHz
	$t_{f(IO)out}$	Output fall time		-	12	ns
	$t_{r(IO)out}$	Output rise time		-	34	
-	t_{EXTIpw}	Pulse width of external signals detected by the EXTI controller	-	10	-	ns

1. The I/O speed is configured using the OSPEEDRx[1:0] bits. Refer to the STM32F0xxxx RM0091 reference manual for a description of GPIO Port configuration register.
2. Guaranteed by design, not tested in production.
3. The maximum frequency is defined in *Figure 22*.
4. When Fm+ configuration is set, the I/O speed control is bypassed. Refer to the STM32F0xxxx reference manual RM0091 for a detailed description of Fm+ I/O configuration.

Figure 22. I/O AC characteristics definition

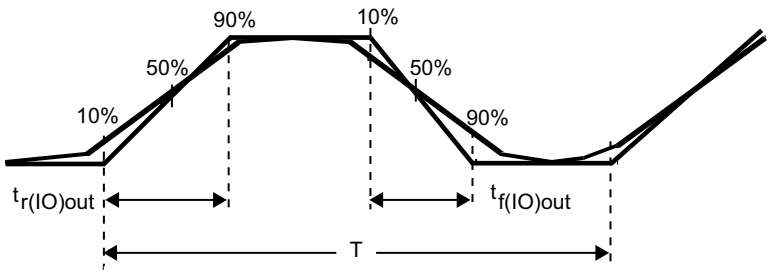

Maximum frequency is achieved if $(t_r + t_f) \leq \frac{2}{3}T$ and if the duty cycle is (45-55%) when loaded by C_L (see the table *I/O AC characteristics definition*)

MS32132V3

6.3.15 NRST pin characteristics

The NRST pin input driver uses the CMOS technology. It is connected to a permanent pull-up resistor, R_{PU}.

Unless otherwise specified, the parameters given in the table below are derived from tests performed under the ambient temperature and supply voltage conditions summarized in *Table 18: General operating conditions*.

Table 49. NRST pin characteristics

Symbol	Parameter	Conditions	Min	Typ	Max	Unit
$V_{IL(NRST)}$	NRST input low level voltage	-	-	-	$0.3\ V_{DD}+0.07$(1)	V
$V_{IH(NRST)}$	NRST input high level voltage	-	$0.445\ V_{DD}+0.398$(1)	-	-	
$V_{hys(NRST)}$	NRST Schmitt trigger voltage hysteresis	-	-	200	-	mV
R_{PU}	Weak pull-up equivalent resistor(2)	$V_{IN} = V_{SS}$	25	40	55	kΩ
$V_{F(NRST)}$	NRST input filtered pulse	-	-	-	100(1)	ns
$V_{NF(NRST)}$	NRST input not filtered pulse	$2.7 < V_{DD} < 3.6$	300(3)	-	-	ns
		$2.0 < V_{DD} < 3.6$	500(3)	-	-	

1. Data based on design simulation only. Not tested in production.
2. The pull-up is designed with a true resistance in series with a switchable PMOS. This PMOS contribution to the series resistance is minimal (~10% order).
3. Data based on design simulation only. Not tested in production.

Figure 23. Recommended NRST pin protection

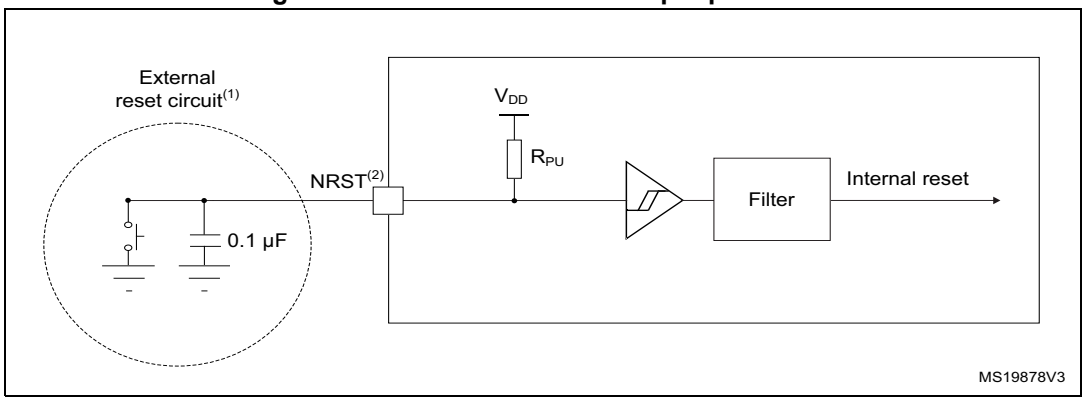

1. The external capacitor protects the device against parasitic resets.
2. The user must ensure that the level on the NRST pin can go below the $V_{IL(NRST)}$ max level specified in *Table 49: NRST pin characteristics*. Otherwise the reset will not be taken into account by the device.

6.3.16 12-bit ADC characteristics

Unless otherwise specified, the parameters given in *Table 50* are derived from tests performed under the conditions summarized in *Table 18: General operating conditions*.

Note: It is recommended to perform a calibration after each power-up.

Table 50. ADC characteristics

Symbol	Parameter	Conditions	Min	Typ	Max	Unit
V_{DDA}	Analog supply voltage for ADC ON	-	2.4	-	3.6	V
$I_{DDA\ (ADC)}$	Current consumption of the ADC(1)	V_{DDA} = 3.3 V	-	0.9	-	mA
f_{ADC}	ADC clock frequency	-	0.6	-	14	MHz
f_S(2)	Sampling rate	12-bit resolution	0.043	-	1	MHz
f_{TRIG}(2)	External trigger frequency	f_{ADC} = 14 MHz, 12-bit resolution	-	-	823	kHz
		12-bit resolution	-	-	17	$1/f_{ADC}$
V_{AIN}	Conversion voltage range	-	0	-	V_{DDA}	V
R_{AIN}(2)	External input impedance	See *Equation 1* and *Table 51* for details	-	-	50	kΩ
R_{ADC}(2)	Sampling switch resistance	-	-	-	1	kΩ
C_{ADC}(2)	Internal sample and hold capacitor	-	-	-	8	pF
t_{CAL}(2)(3)	Calibration time	f_{ADC} = 14 MHz	5.9			µs
		-	83			$1/f_{ADC}$

Table 50. ADC characteristics (continued)

Symbol	Parameter	Conditions	Min	Typ	Max	Unit
$W_{LATENCY}$(2)(4)	ADC_DR register ready latency	ADC clock = HSI14	1.5 ADC cycles + 2 f_{PCLK} cycles	-	1.5 ADC cycles + 3 f_{PCLK} cycles	-
		ADC clock = PCLK/2	-	4.5	-	f_{PCLK} cycle
		ADC clock = PCLK/4	-	8.5	-	f_{PCLK} cycle
t_{latr}(2)	Trigger conversion latency	$f_{ADC} = f_{PCLK}/2 = 14$ MHz	0.196			µs
		$f_{ADC} = f_{PCLK}/2$	5.5			$1/f_{PCLK}$
		$f_{ADC} = f_{PCLK}/4 = 12$ MHz	0.219			µs
		$f_{ADC} = f_{PCLK}/4$	10.5			$1/f_{PCLK}$
		$f_{ADC} = f_{HSI14} = 14$ MHz	0.179	-	0.250	µs
$Jitter_{ADC}$	ADC jitter on trigger conversion	$f_{ADC} = f_{HSI14}$	-	1	-	$1/f_{HSI14}$
t_S(2)	Sampling time	$f_{ADC} = 14$ MHz	0.107	-	17.1	µs
		-	1.5	-	239.5	$1/f_{ADC}$
t_{STAB}(2)	Stabilization time	-	14			$1/f_{ADC}$
t_{CONV}(2)	Total conversion time (including sampling time)	$f_{ADC} = 14$ MHz, 12-bit resolution	1	-	18	µs
		12-bit resolution	14 to 252 (t_S for sampling +12.5 for successive approximation)			$1/f_{ADC}$

1. During conversion of the sampled value (12.5 x ADC clock period), an additional consumption of 100 µA on I_{DDA} and 60 µA on I_{DD} should be taken into account.
2. Guaranteed by design, not tested in production.
3. Specified value includes only ADC timing. It does not include the latency of the register access.
4. This parameter specify latency for transfer of the conversion result to the ADC_DR register. EOC flag is set at this time.

Equation 1: R_{AIN} max formula

$$R_{AIN} < \frac{T_S}{f_{ADC} \times C_{ADC} \times \ln(2^{N+2})} - R_{ADC}$$

The formula above (*Equation 1*) is used to determine the maximum external impedance allowed for an error below 1/4 of LSB. Here N = 12 (from 12-bit resolution).

Table 51. R_{AIN} max for f_{ADC} = 14 MHz

T_s (cycles)	t_S (µs)	R_{AIN} max (kΩ)(1)
1.5	0.11	0.4
7.5	0.54	5.9
13.5	0.96	11.4

Table 51. R_{AIN} max for f_{ADC} = 14 MHz (continued)

T_s (cycles)	t_S (µs)	R_{AIN} max (kΩ)(1)
28.5	2.04	25.2
41.5	2.96	37.2
55.5	3.96	50
71.5	5.11	NA
239.5	17.1	NA

1. Guaranteed by design, not tested in production.

Table 52. ADC accuracy(1)(2)(3)

Symbol	Parameter	Test conditions	Typ	Max(4)	Unit
ET	Total unadjusted error	f_{PCLK} = 48 MHz, f_{ADC} = 14 MHz, R_{AIN} < 10 kΩ V_{DDA} = 3 V to 3.6 V T_A = 25 °C	±1.3	±2	LSB
EO	Offset error		±1	±1.5	
EG	Gain error		±0.5	±1.5	
ED	Differential linearity error		±0.7	±1	
EL	Integral linearity error		±0.8	±1.5	
ET	Total unadjusted error	f_{PCLK} = 48 MHz, f_{ADC} = 14 MHz, R_{AIN} < 10 kΩ V_{DDA} = 2.7 V to 3.6 V T_A = - 40 to 105 °C	±3.3	±4	LSB
EO	Offset error		±1.9	±2.8	
EG	Gain error		±2.8	±3	
ED	Differential linearity error		±0.7	±1.3	
EL	Integral linearity error		±1.2	±1.7	
ET	Total unadjusted error	f_{PCLK} = 48 MHz, f_{ADC} = 14 MHz, R_{AIN} < 10 kΩ V_{DDA} = 2.4 V to 3.6 V T_A = 25 °C	±3.3	±4	LSB
EO	Offset error		±1.9	±2.8	
EG	Gain error		±2.8	±3	
ED	Differential linearity error		±0.7	±1.3	
EL	Integral linearity error		±1.2	±1.7	

1. ADC DC accuracy values are measured after internal calibration.
2. ADC Accuracy vs. Negative Injection Current: Injecting negative current on any of the standard (non-robust) analog input pins should be avoided as this significantly reduces the accuracy of the conversion being performed on another analog input. It is recommended to add a Schottky diode (pin to ground) to standard analog pins which may potentially inject negative current.
   Any positive injection current within the limits specified for $I_{INJ(PIN)}$ and $\Sigma I_{INJ(PIN)}$ in *Section 6.3.14* does not affect the ADC accuracy.
3. Better performance may be achieved in restricted V_{DDA}, frequency and temperature ranges.
4. Data based on characterization results, not tested in production.

Figure 24. ADC accuracy characteristics

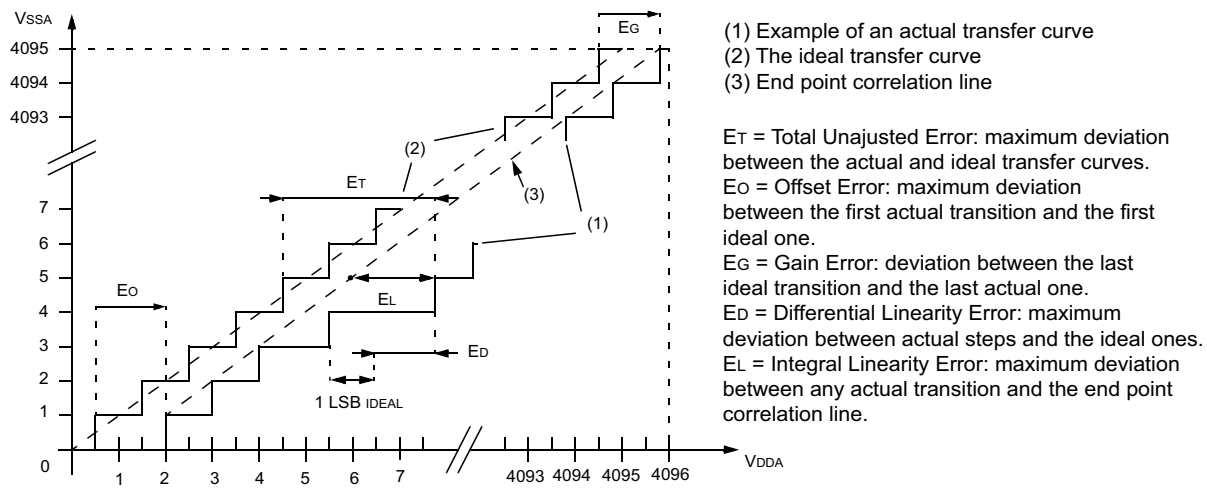

Figure 25. Typical connection diagram using the ADC

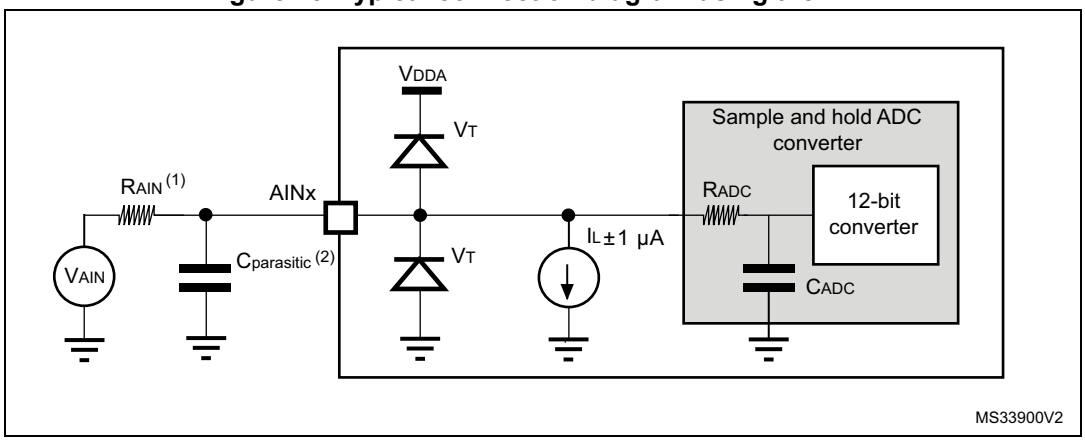

1. Refer to *Table 50: ADC characteristics* for the values of R_{AIN}, R_{ADC} and C_{ADC}.
2. $C_{parasitic}$ represents the capacitance of the PCB (dependent on soldering and PCB layout quality) plus the pad capacitance (roughly 7 pF). A high $C_{parasitic}$ value will downgrade conversion accuracy. To remedy this, f_{ADC} should be reduced.

General PCB design guidelines

Power supply decoupling should be performed as shown in *Figure 12: Power supply scheme*. The 10 nF capacitor should be ceramic (good quality) and it should be placed as close as possible to the chip.

6.3.17 Temperature sensor characteristics

Table 53. TS characteristics

Symbol	Parameter	Min	Typ	Max	Unit
T_L(1)	V_{SENSE} linearity with temperature	-	± 1	± 2	°C
Avg_Slope(1)	Average slope	4.0	4.3	4.6	mV/°C
V_{30}	Voltage at 30 °C (± 5 °C)(2)	1.34	1.43	1.52	V
t_{START}(1)	ADC_IN16 buffer startup time	-	-	10	µs
t_{S_temp}(1)	ADC sampling time when reading the temperature	4	-	-	µs

1. Guaranteed by design, not tested in production.
2. Measured at V_{DDA} = 3.3 V ± 10 mV. The V_{30} ADC conversion result is stored in the TS_CAL1 byte. Refer to *Table 3: Temperature sensor calibration values*.

6.3.18 V_{BAT} monitoring characteristics

Table 54. V_{BAT} monitoring characteristics

Symbol	Parameter	Min	Typ	Max	Unit
R	Resistor bridge for V_{BAT}	-	2 x 50	-	kΩ
Q	Ratio on V_{BAT} measurement	-	2	-	-
Er(1)	Error on Q	–1	-	+1	%
t_{S_vbat}(1)	ADC sampling time when reading the V_{BAT}	4	-	-	µs

1. Guaranteed by design, not tested in production.

6.3.19 Timer characteristics

The parameters given in the following tables are guaranteed by design.

Refer to *Section 6.3.14: I/O port characteristics* for details on the input/output alternate function characteristics (output compare, input capture, external clock, PWM output).

Table 55. TIMx characteristics

Symbol	Parameter	Conditions	Min	Typ	Max	Unit
$t_{res(TIM)}$	Timer resolution time	-	-	1	-	$t_{TIMxCLK}$
		$f_{TIMxCLK}$ = 48 MHz	-	20.8	-	ns
f_{EXT}	Timer external clock frequency on CH1 to CH4	-	-	$f_{TIMxCLK}/2$	-	MHz
		$f_{TIMxCLK}$ = 48 MHz	-	24	-	MHz
t_{MAX_COUNT}	16-bit timer maximum period	-	-	2^{16}	-	$t_{TIMxCLK}$
		$f_{TIMxCLK}$ = 48 MHz	-	1365	-	µs
	32-bit counter maximum period	-	-	2^{32}	-	$t_{TIMxCLK}$
		$f_{TIMxCLK}$ = 48 MHz	-	89.48	-	s

Table 56. IWDG min/max timeout period at 40 kHz (LSI)(1)

Prescaler divider	PR[2:0] bits	Min timeout RL[11:0]= 0x000	Max timeout RL[11:0]= 0xFFF	Unit
/4	0	0.1	409.6	ms
/8	1	0.2	819.2	
/16	2	0.4	1638.4	
/32	3	0.8	3276.8	
/64	4	1.6	6553.6	
/128	5	3.2	13107.2	
/256	6 or 7	6.4	26214.4	

1. These timings are given for a 40 kHz clock but the microcontroller internal RC frequency can vary from 30 to 60 kHz. Moreover, given an exact RC oscillator frequency, the exact timings still depend on the phasing of the APB interface clock versus the LSI clock so that there is always a full RC period of uncertainty.

Table 57. WWDG min/max timeout value at 48 MHz (PCLK)

Prescaler	WDGTB	Min timeout value	Max timeout value	Unit
1	0	0.0853	5.4613	ms
2	1	0.1706	10.9226	
4	2	0.3413	21.8453	
8	3	0.6826	43.6906	

6.3.20 Communication interfaces

I²C interface characteristics

The I²C interface meets the timings requirements of the I²C-bus specification and user manual rev. 03 for:

- Standard-mode (Sm): with a bit rate up to 100 kbit/s
- Fast-mode (Fm): with a bit rate up to 400 kbit/s
- Fast-mode Plus (Fm+): with a bit rate up to 1 Mbit/s.

The I²C timings requirements are guaranteed by design when the I2Cx peripheral is properly configured (refer to Reference manual).

The SDA and SCL I/O requirements are met with the following restrictions: the SDA and SCL I/O pins are not “true” open-drain. When configured as open-drain, the PMOS connected between the I/O pin and V_{DDIOx} is disabled, but is still present. Only FTf I/O pins support Fm+ low level output current maximum requirement. Refer to *Section 6.3.14: I/O port characteristics* for the I²C I/Os characteristics.

All I²C SDA and SCL I/Os embed an analog filter. Refer to the table below for the analog filter characteristics:

Table 58. I²C analog filter characteristics(1)

Symbol	Parameter	Min	Max	Unit
t_{AF}	Maximum width of spikes that are suppressed by the analog filter	50(2)	260(3)	ns

1. Guaranteed by design, not tested in production.
2. Spikes with widths below $t_{AF(min)}$ are filtered.
3. Spikes with widths above $t_{AF(max)}$ are not filtered

SPI/I²S characteristics

Unless otherwise specified, the parameters given in *Table 59* for SPI or in *Table 60* for I²S are derived from tests performed under the ambient temperature, f_{PCLKx} frequency and supply voltage conditions summarized in *Table 18: General operating conditions*.

Refer to *Section 6.3.14: I/O port characteristics* for more details on the input/output alternate function characteristics (NSS, SCK, MOSI, MISO for SPI and WS, CK, SD for I²S).

Table 59. SPI characteristics(1)

Symbol	Parameter	Conditions	Min	Max	Unit
f_{SCK} $1/t_{c(SCK)}$	SPI clock frequency	Master mode	-	18	MHz
		Slave mode	-	18	
$t_{r(SCK)}$ $t_{f(SCK)}$	SPI clock rise and fall time	Capacitive load: C = 15 pF	-	6	ns
$t_{su(NSS)}$	NSS setup time	Slave mode	4Tpclk	-	ns
$t_{h(NSS)}$	NSS hold time	Slave mode	2Tpclk + 10	-	
$t_{w(SCKH)}$ $t_{w(SCKL)}$	SCK high and low time	Master mode, f_{PCLK} = 36 MHz, presc = 4	Tpclk/2 -2	Tpclk/2 + 1	
$t_{su(MI)}$ $t_{su(SI)}$	Data input setup time	Master mode	4	-	
		Slave mode	5	-	
$t_{h(MI)}$	Data input hold time	Master mode	4	-	
$t_{h(SI)}$		Slave mode	5	-	
$t_{a(SO)}$(2)	Data output access time	Slave mode, f_{PCLK} = 20 MHz	0	3Tpclk	
$t_{dis(SO)}$(3)	Data output disable time	Slave mode	0	18	
$t_{v(SO)}$	Data output valid time	Slave mode (after enable edge)	-	22.5	
$t_{v(MO)}$	Data output valid time	Master mode (after enable edge)	-	6	
$t_{h(SO)}$	Data output hold time	Slave mode (after enable edge)	11.5	-	
$t_{h(MO)}$		Master mode (after enable edge)	2	-	
DuCy(SCK)	SPI slave input clock duty cycle	Slave mode	25	75	%

1. Data based on characterization results, not tested in production.
2. Min time is for the minimum time to drive the output and the max time is for the maximum time to validate the data.
3. Min time is for the minimum time to invalidate the output and the max time is for the maximum time to put the data in Hi-Z

Figure 26. SPI timing diagram - slave mode and CPHA = 0

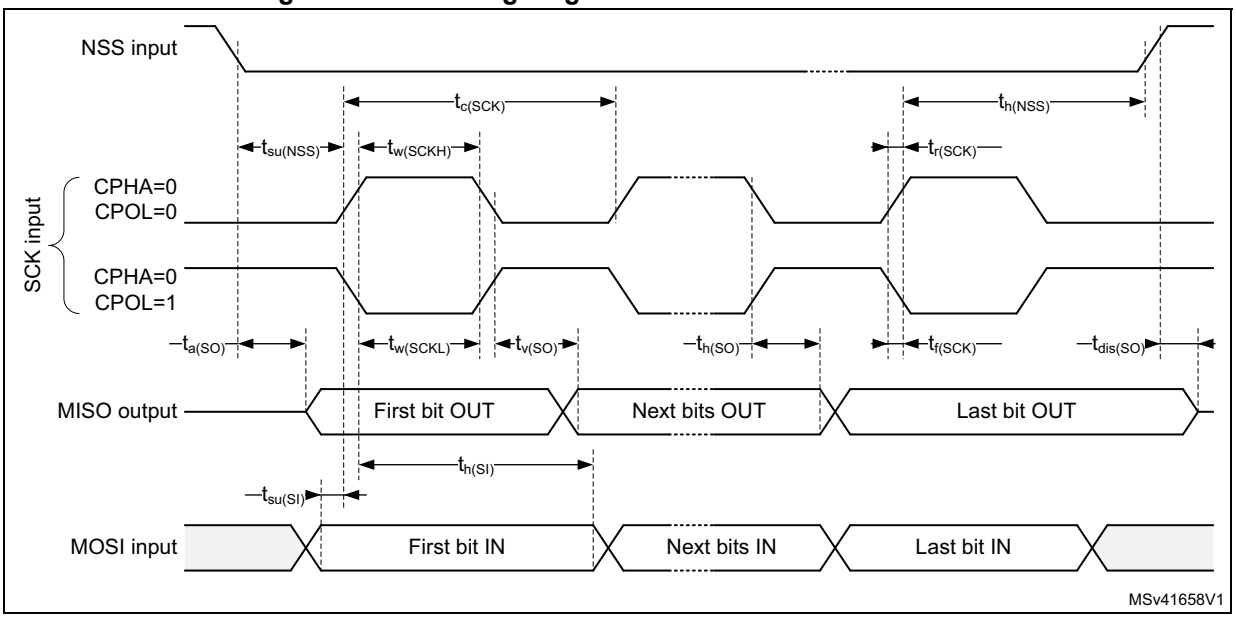

Figure 27. SPI timing diagram - slave mode and CPHA = 1

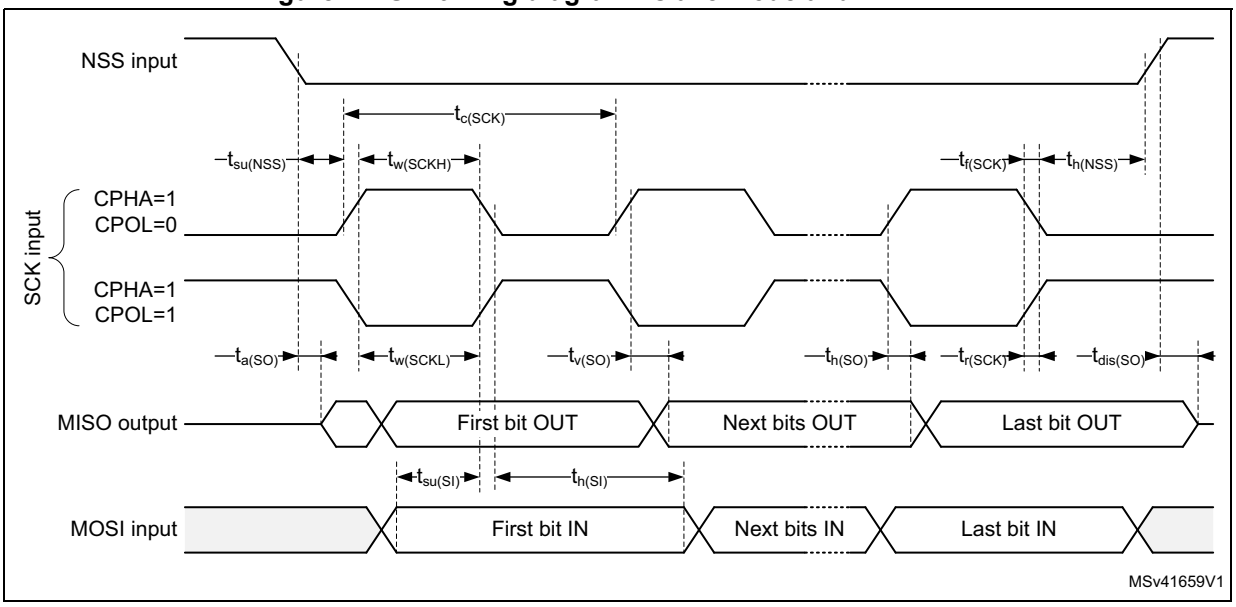

1. Measurement points are done at CMOS levels: 0.3 V_{DD} and 0.7 V_{DD}.

Figure 28. SPI timing diagram - master mode

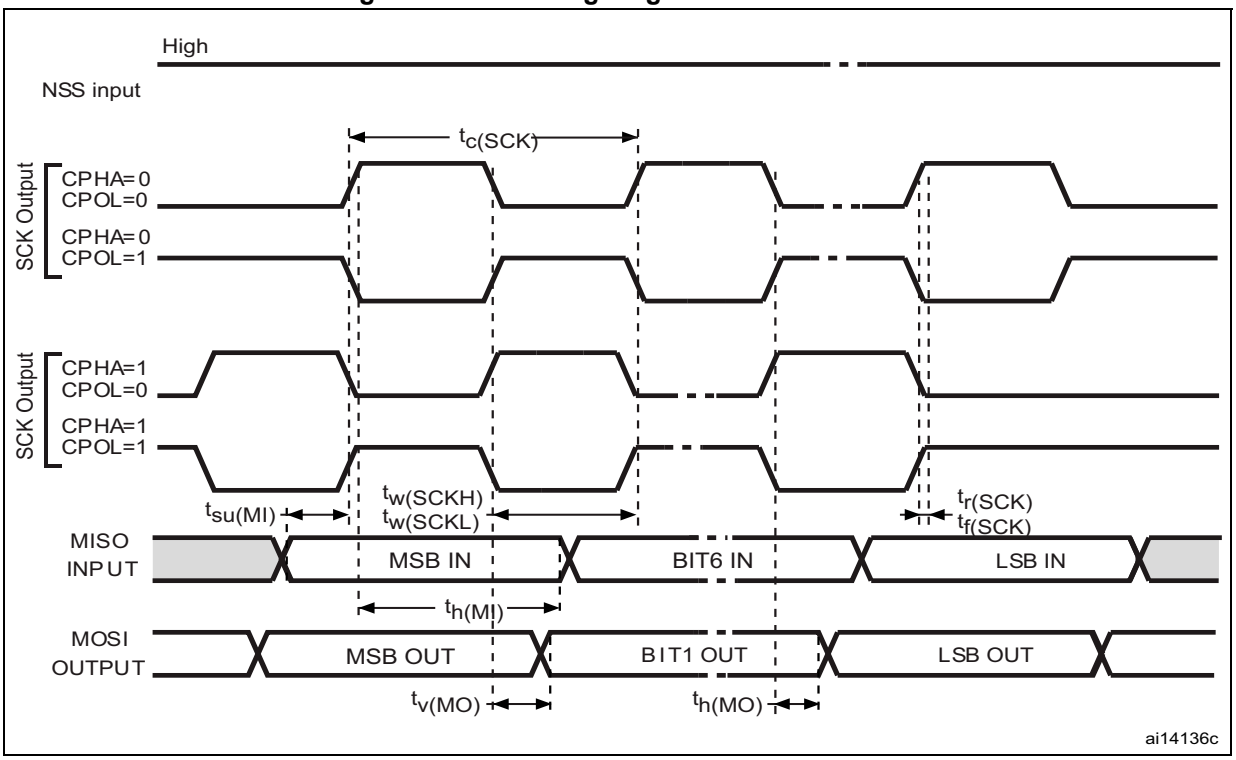

1. Measurement points are done at CMOS levels: 0.3 V_{DD} and 0.7 V_{DD}.

Table 60. I^2S characteristics(1)

Symbol	Parameter	Conditions	Min	Max	Unit
f_{CK} $1/t_{c(CK)}$	I^2S clock frequency	Master mode (data: 16 bits, Audio frequency = 48 kHz)	1.597	1.601	MHz
		Slave mode	0	6.5	
$t_{r(CK)}$	I^2S clock rise time	Capacitive load C_L = 15 pF	-	10	ns
$t_{f(CK)}$	I^2S clock fall time		-	12	
$t_{w(CKH)}$	I^2S clock high time	Master f_{PCLK}= 16 MHz, audio frequency = 48 kHz	306	-	
$t_{w(CKL)}$	I^2S clock low time		312	-	
$t_{v(WS)}$	WS valid time	Master mode	2	-	
$t_{h(WS)}$	WS hold time	Master mode	2	-	
$t_{su(WS)}$	WS setup time	Slave mode	7	-	
$t_{h(WS)}$	WS hold time	Slave mode	0	-	
DuCy(SCK)	I^2S slave input clock duty cycle	Slave mode	25	75	%

Table 60. I²S characteristics(1) (continued)

Symbol	Parameter	Conditions	Min	Max	Unit
$t_{su(SD_MR)}$	Data input setup time	Master receiver	6	-	ns
$t_{su(SD_SR)}$		Slave receiver	2	-	
$t_{h(SD_MR)}$(2)	Data input hold time	Master receiver	4	-	
$t_{h(SD_SR)}$(2)		Slave receiver	0.5	-	
$t_{v(SD_MT)}$(2)	Data output valid time	Master transmitter	-	4	
$t_{v(SD_ST)}$(2)		Slave transmitter	-	20	
$t_{h(SD_MT)}$	Data output hold time	Master transmitter	0	-	
$t_{h(SD_ST)}$		Slave transmitter	13	-	

1. Data based on design simulation and/or characterization results, not tested in production.
2. Depends on f_{PCLK}. For example, if f_{PCLK} = 8 MHz, then T_{PCLK} = 1/f_{PLCLK} = 125 ns.

Figure 29. I²S slave timing diagram (Philips protocol)

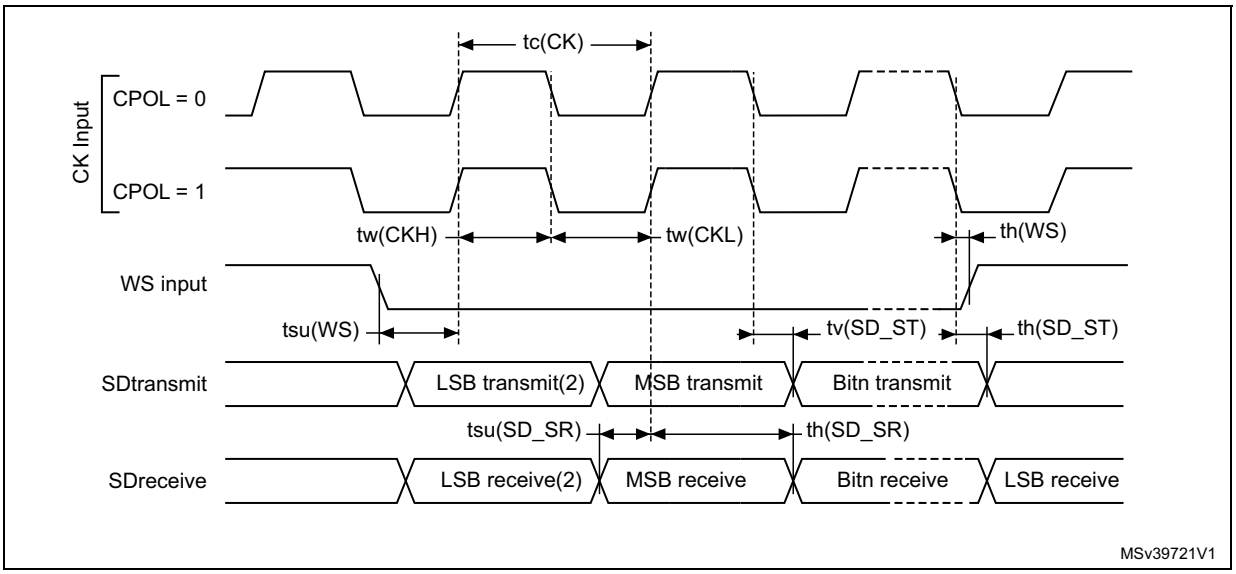

1. Measurement points are done at CMOS levels: 0.3 × V_{DDIOx} and 0.7 × V_{DDIOx}.
2. LSB transmit/receive of the previously transmitted byte. No LSB transmit/receive is sent before the first byte.

Figure 30. I²S master timing diagram (Philips protocol)

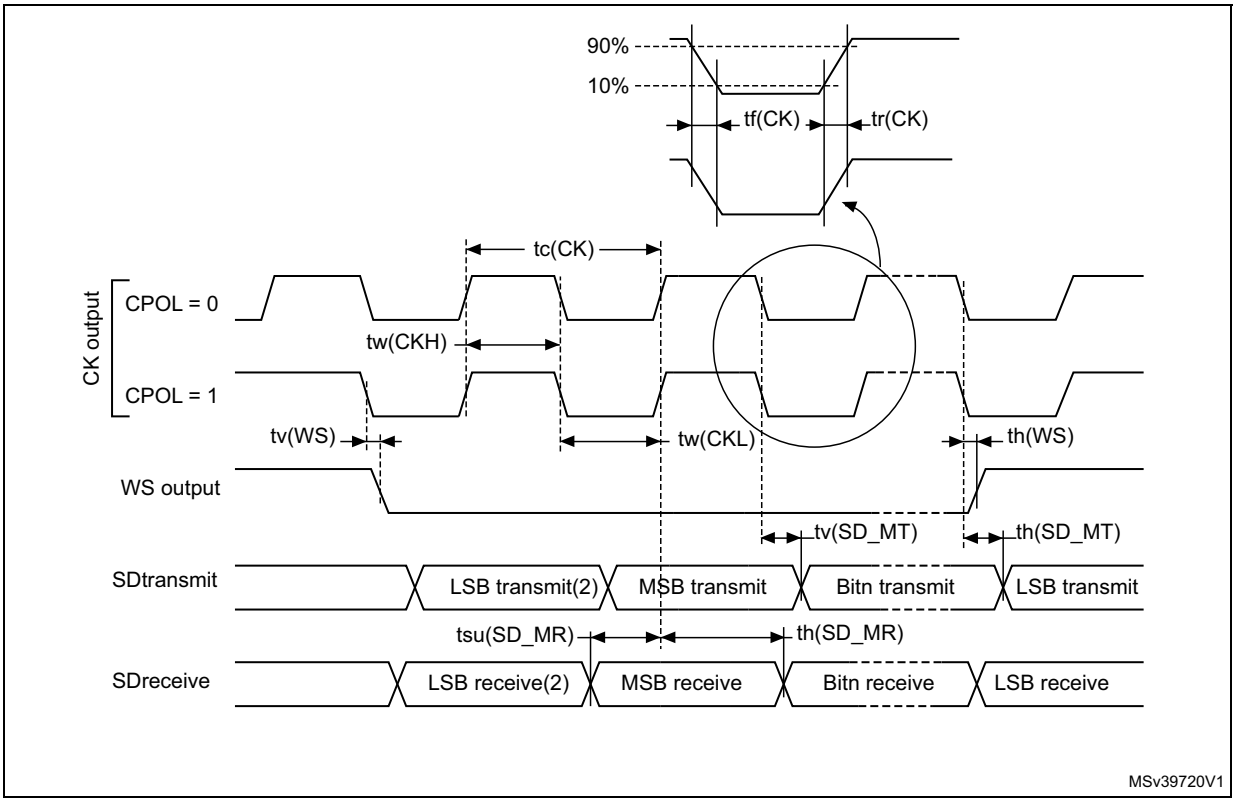

1. Data based on characterization results, not tested in production.
2. LSB transmit/receive of the previously transmitted byte. No LSB transmit/receive is sent before the first byte.

7 Package information

In order to meet environmental requirements, ST offers these devices in different grades of ECOPACK® packages, depending on their level of environmental compliance. ECOPACK® specifications, grade definitions and product status are available at: *www.st.com*. ECOPACK® is an ST trademark.

7.1 LQFP48 package information

LQFP48 is a 48-pin, 7 x 7 mm low-profile quad flat package.

Figure 31. LQFP48 package outline

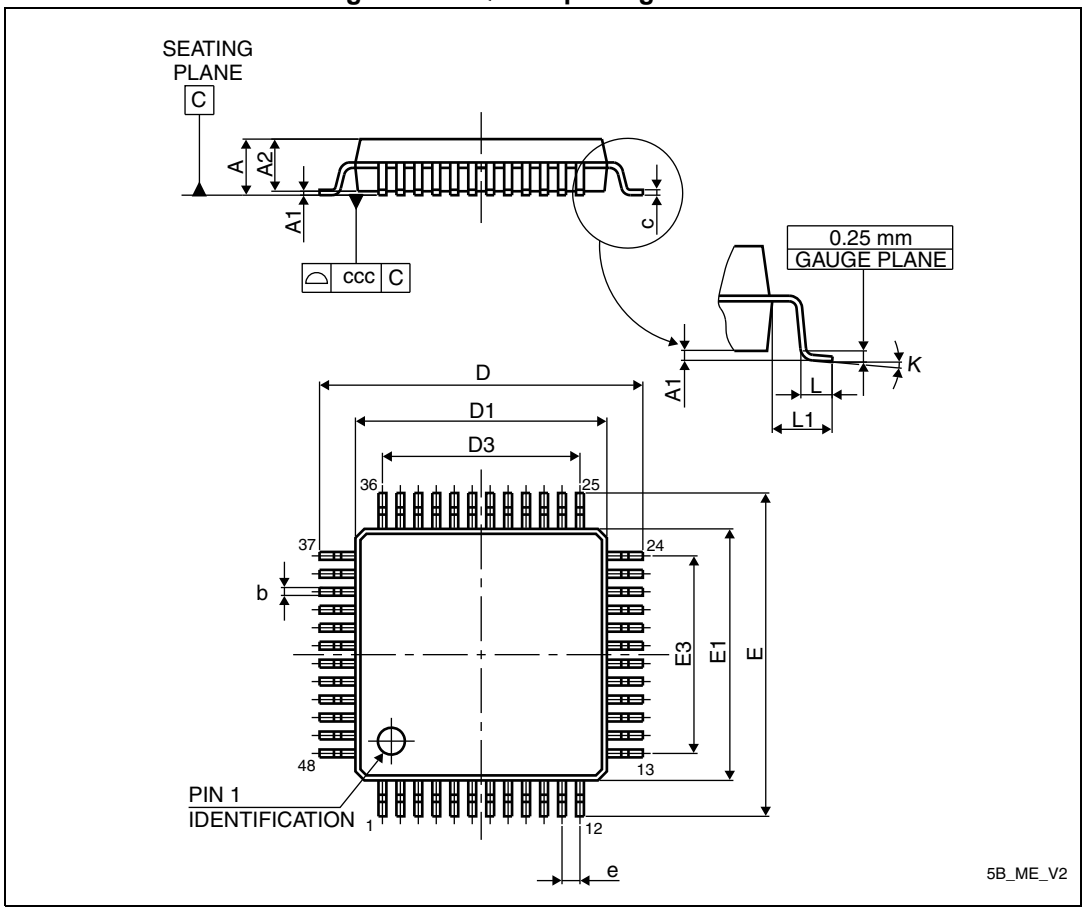

1. Drawing is not to scale.

Table 61. LQFP48 package mechanical data

Symbol	millimeters			inches[1]		
	Min	Typ	Max	Min	Typ	Max
A	-	-	1.600	-	-	0.0630
A1	0.050	-	0.150	0.0020	-	0.0059
A2	1.350	1.400	1.450	0.0531	0.0551	0.0571
b	0.170	0.220	0.270	0.0067	0.0087	0.0106
c	0.090	-	0.200	0.0035	-	0.0079
D	8.800	9.000	9.200	0.3465	0.3543	0.3622
D1	6.800	7.000	7.200	0.2677	0.2756	0.2835
D3	-	5.500	-	-	0.2165	-
E	8.800	9.000	9.200	0.3465	0.3543	0.3622
E1	6.800	7.000	7.200	0.2677	0.2756	0.2835
E3	-	5.500	-	-	0.2165	-
e	-	0.500	-	-	0.0197	-
L	0.450	0.600	0.750	0.0177	0.0236	0.0295
L1	-	1.000	-	-	0.0394	-
k	0°	3.5°	7°	0°	3.5°	7°
ccc	-	-	0.080	-	-	0.0031

1. Values in inches are converted from mm and rounded to 4 decimal digits.

Figure 32. Recommended footprint for LQFP48 package

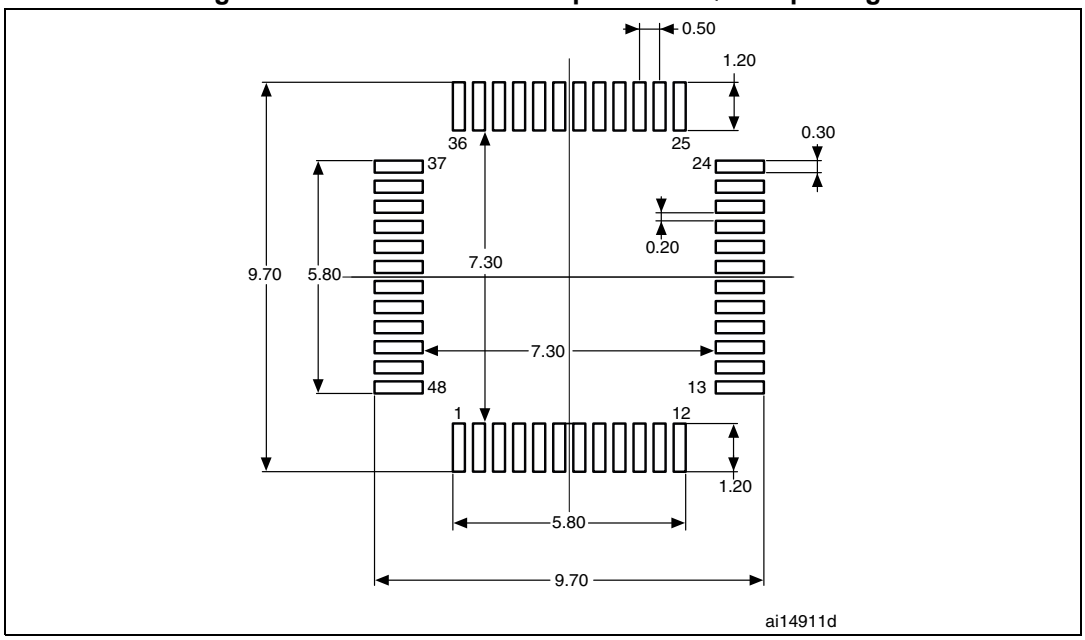

1. Dimensions are expressed in millimeters.

Device marking

The following figure gives an example of topside marking orientation versus pin 1 identifier location.

Other optional marking or inset/upset marks, which identify the parts throughout supply chain operations, are not indicated below.

Figure 33. LQFP48 package marking example

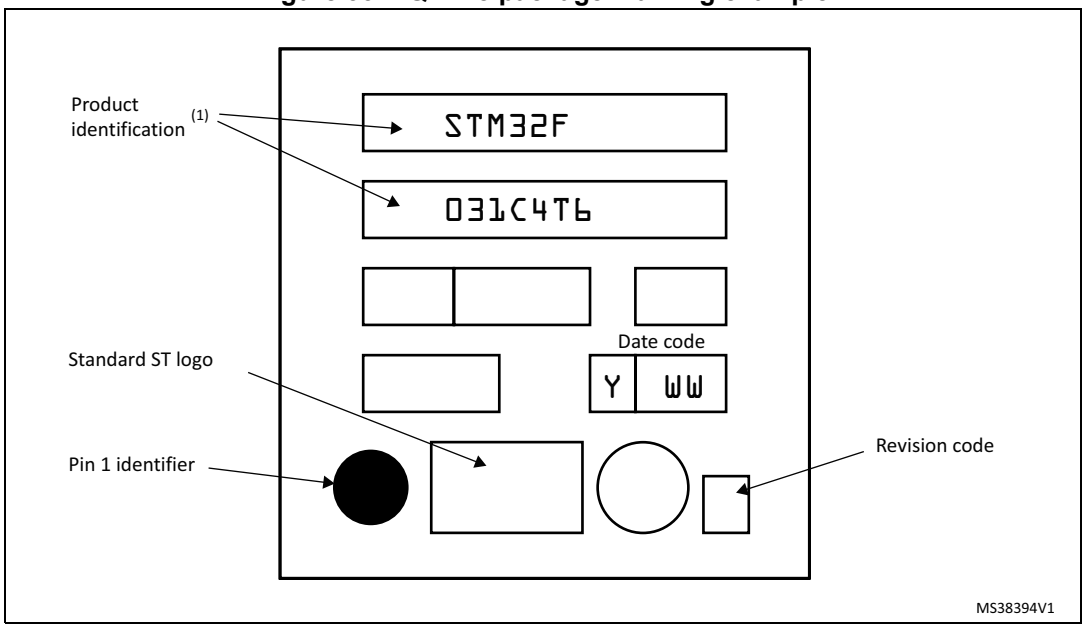

1. Parts marked as ES or E or accompanied by an Engineering Sample notification letter are not yet qualified and therefore not approved for use in production. ST is not responsible for any consequences resulting from such use. In no event will ST be liable for the customer using any of these engineering samples in production. ST's Quality department must be contacted prior to any decision to use these engineering samples to run a qualification activity.

7.2 LQFP32 package information

LQFP32 is a 32-pin, 7 x 7 mm low-profile quad flat package.

Figure 34. LQFP32 package outline

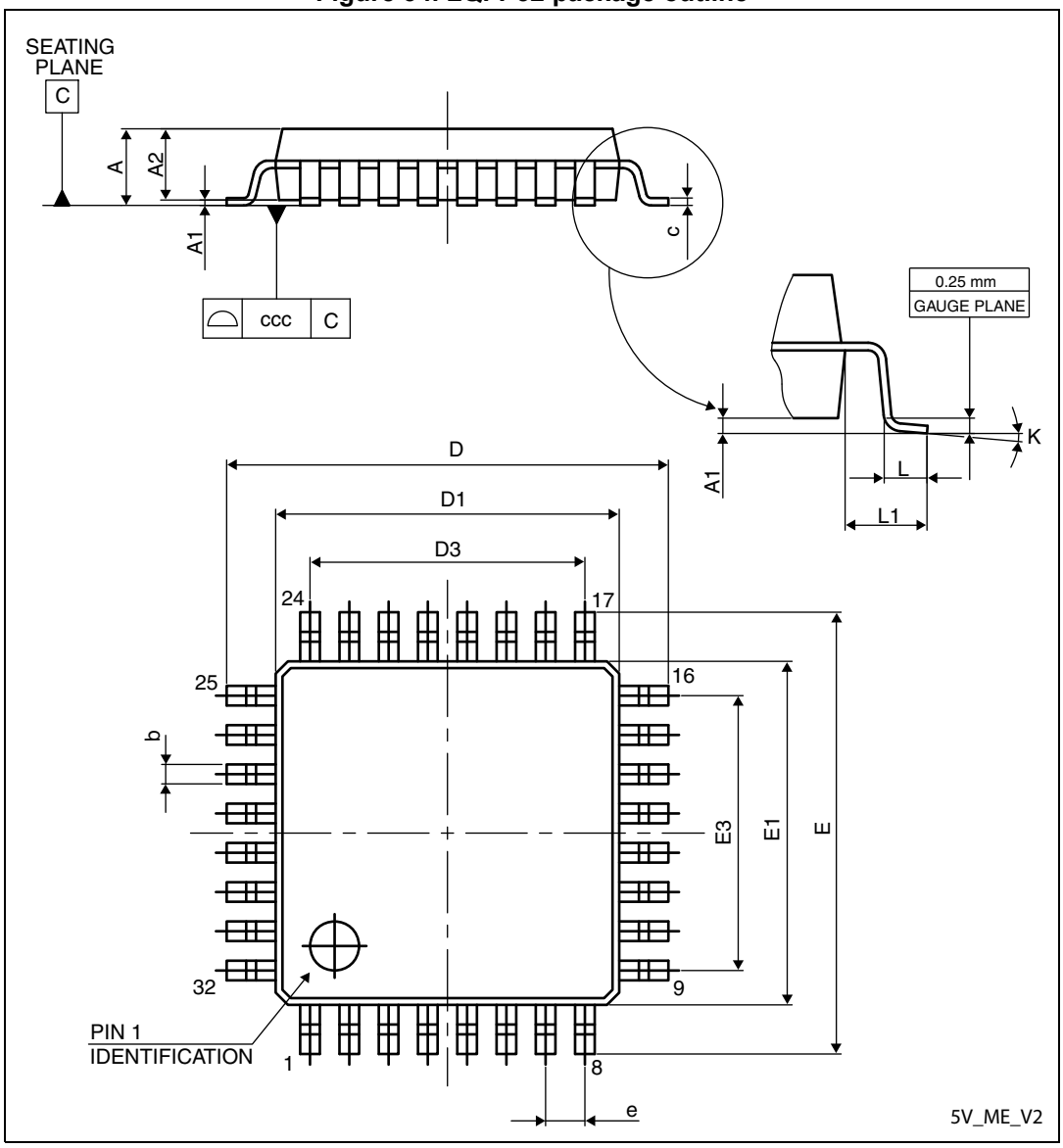

1. Drawing is not to scale.

Table 62. LQFP32 package mechanical data

Symbol	millimeters			inches[1]		
	Min	Typ	Max	Min	Typ	Max
A	-	-	1.600	-	-	0.0630
A1	0.050	-	0.150	0.0020	-	0.0059
A2	1.350	1.400	1.450	0.0531	0.0551	0.0571
b	0.300	0.370	0.450	0.0118	0.0146	0.0177
c	0.090	-	0.200	0.0035	-	0.0079
D	8.800	9.000	9.200	0.3465	0.3543	0.3622
D1	6.800	7.000	7.200	0.2677	0.2756	0.2835
D3	-	5.600	-	-	0.2205	-
E	8.800	9.000	9.200	0.3465	0.3543	0.3622
E1	6.800	7.000	7.200	0.2677	0.2756	0.2835
E3	-	5.600	-	-	0.2205	-
e	-	0.800	-	-	0.0315	-
L	0.450	0.600	0.750	0.0177	0.0236	0.0295
L1	-	1.000	-	-	0.0394	-
k	0°	3.5°	7°	0°	3.5°	7°
ccc	-	-	0.100	-	-	0.0039

1. Values in inches are converted from mm and rounded to 4 decimal digits.

Figure 35. Recommended footprint for LQFP32 package

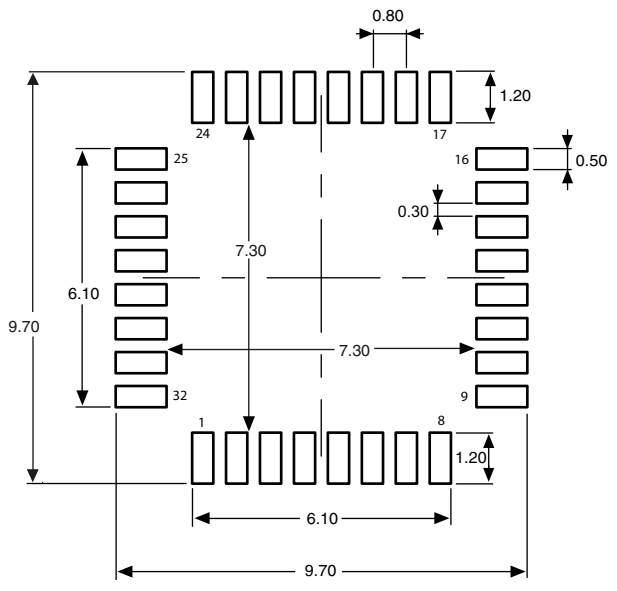

1. Dimensions are expressed in millimeters.

Device marking

The following figure gives an example of topside marking orientation versus pin 1 identifier location.

Other optional marking or inset/upset marks, which identify the parts throughout supply chain operations, are not indicated below.

Figure 36. LQFP32 package marking example

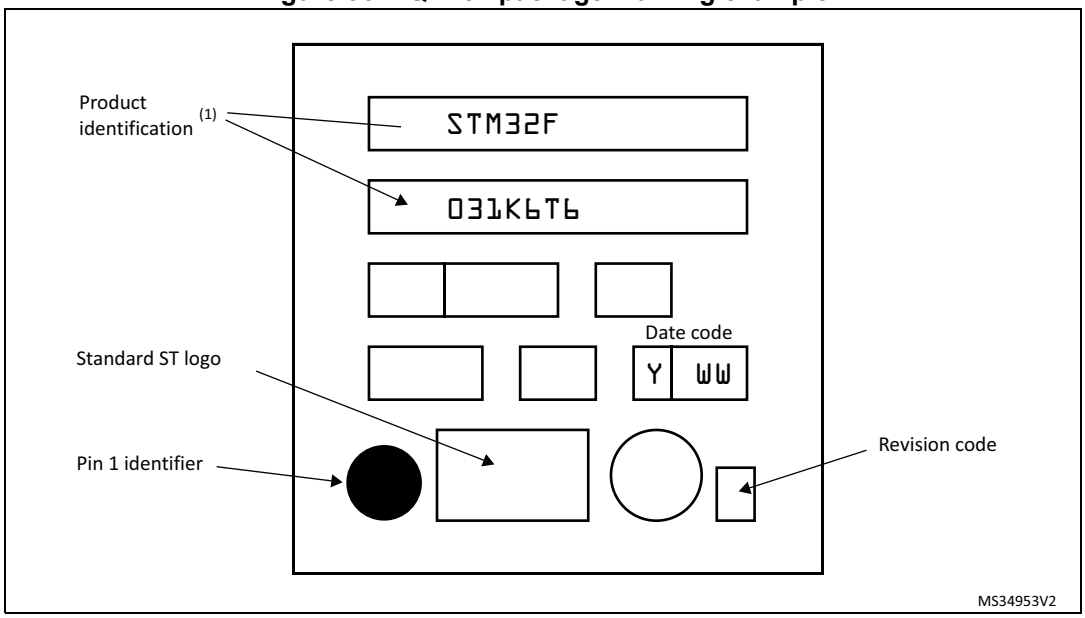

1. Parts marked as ES or E or accompanied by an Engineering Sample notification letter are not yet qualified and therefore not approved for use in production. ST is not responsible for any consequences resulting from such use. In no event will ST be liable for the customer using any of these engineering samples in production. ST's Quality department must be contacted prior to any decision to use these engineering samples to run a qualification activity.

7.3 UFQFPN32 package information

UFQFPN32 is a 32-pin, 5x5 mm, 0.5 mm pitch ultra-thin fine-pitch quad flat package.

Figure 37. UFQFPN32 package outline

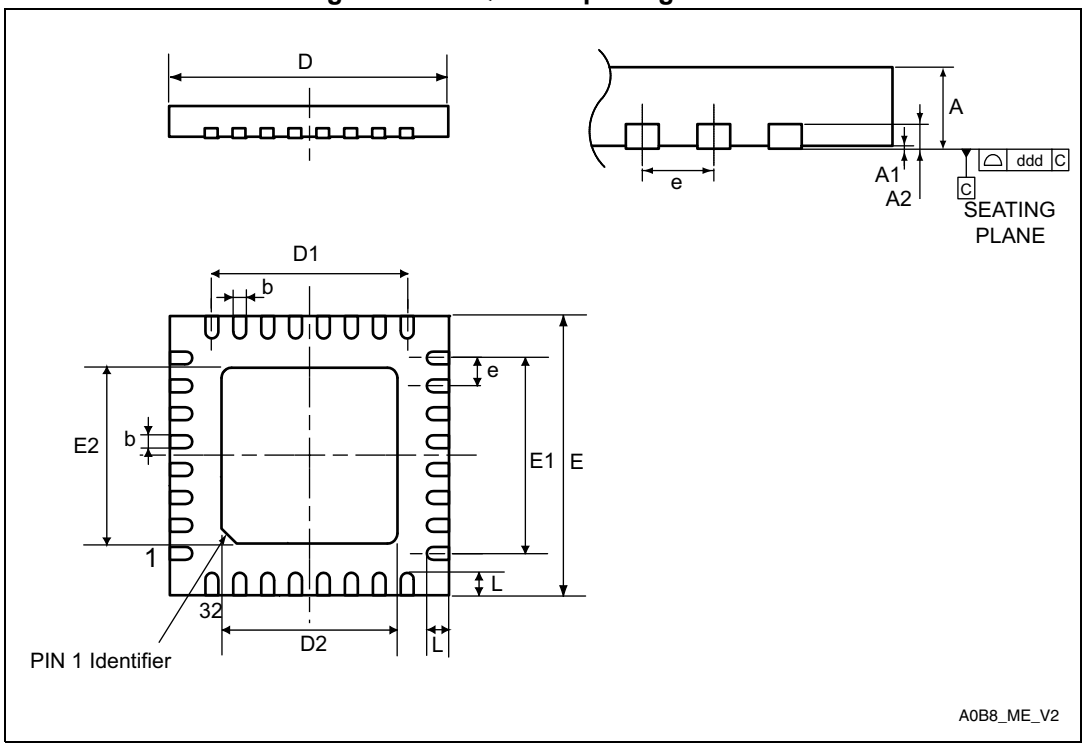

1. Drawing is not to scale.
2. All leads/pads should also be soldered to the PCB to improve the lead/pad solder joint life.
3. There is an exposed die pad on the underside of the UFQFPN package. This pad is used for the device ground and must be connected. It is referred to as pin 0 in *Table: Pin definitions*.

Table 63. UFQFPN32 package mechanical data

Symbol	millimeters			inches[1]		
	Min	Typ	Max	Min	Typ	Max
A	0.500	0.550	0.600	0.0197	0.0217	0.0236
A1	0.000	0.020	0.050	0.0000	0.0008	0.0020
A3	-	0.152	-	-	0.0060	-
b	0.180	0.230	0.280	0.0071	0.0091	0.0110
D	4.900	5.000	5.100	0.1929	0.1969	0.2008
D1	3.400	3.500	3.600	0.1339	0.1378	0.1417
D2	3.400	3.500	3.600	0.1339	0.1378	0.1417
E	4.900	5.000	5.100	0.1929	0.1969	0.2008
E1	3.400	3.500	3.600	0.1339	0.1378	0.1417
E2	3.400	3.500	3.600	0.1339	0.1378	0.1417
e	-	0.500	-	-	0.0197	-
L	0.300	0.400	0.500	0.0118	0.0157	0.0197
ddd	-	-	0.080	-	-	0.0031

1. Values in inches are converted from mm and rounded to 4 decimal digits.

Figure 38. Recommended footprint for UFQFPN32 package

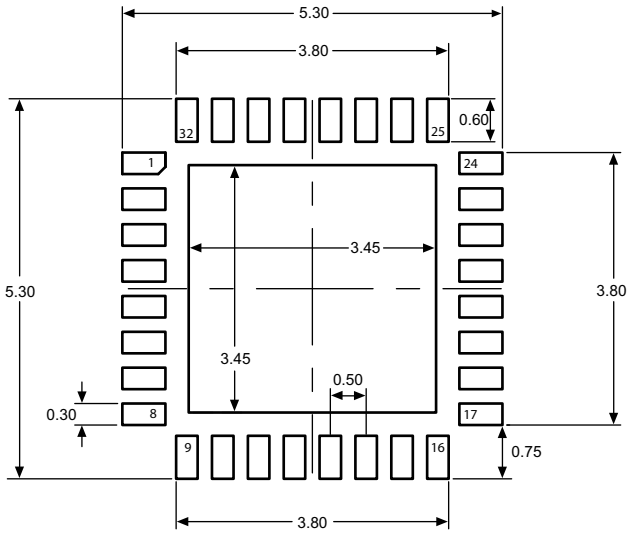

1. Dimensions are expressed in millimeters.

Device marking

The following figure gives an example of topside marking orientation versus pin 1 identifier location.

Other optional marking or inset/upset marks, which identify the parts throughout supply chain operations, are not indicated below.

Figure 39. UFQFPN32 package marking example

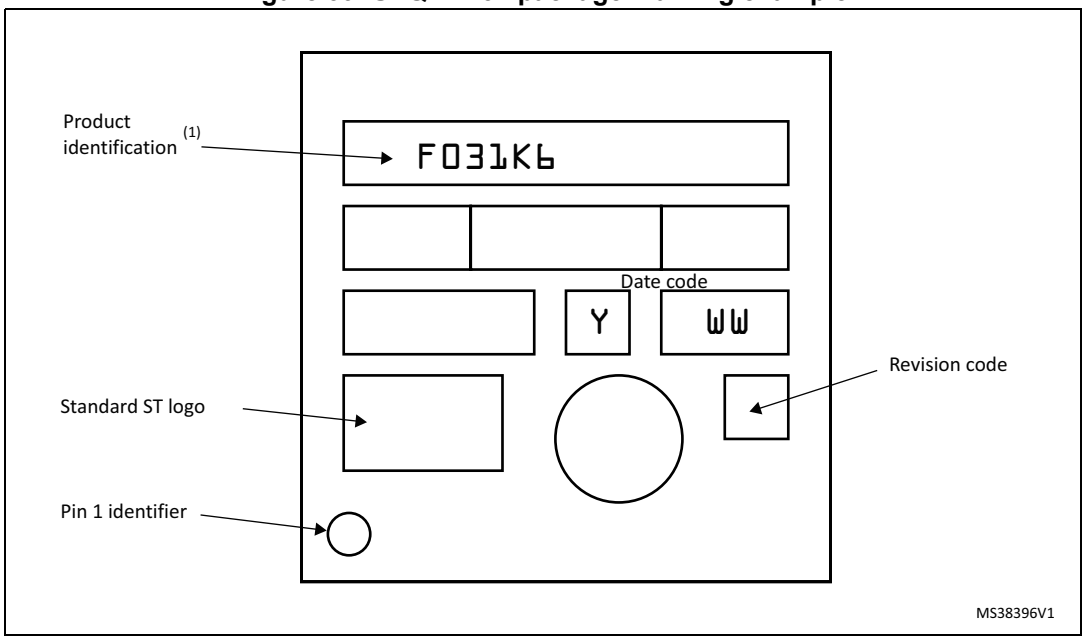

1. Parts marked as ES or E or accompanied by an Engineering Sample notification letter are not yet qualified and therefore not approved for use in production. ST is not responsible for any consequences resulting from such use. In no event will ST be liable for the customer using any of these engineering samples in production. ST's Quality department must be contacted prior to any decision to use these engineering samples to run a qualification activity.

7.4 UFQFPN28 package information

UFQFPN28 is a 28-lead, 4x4 mm, 0.5 mm pitch, ultra-thin fine-pitch quad flat package.

Figure 40. UFQFPN28 package outline

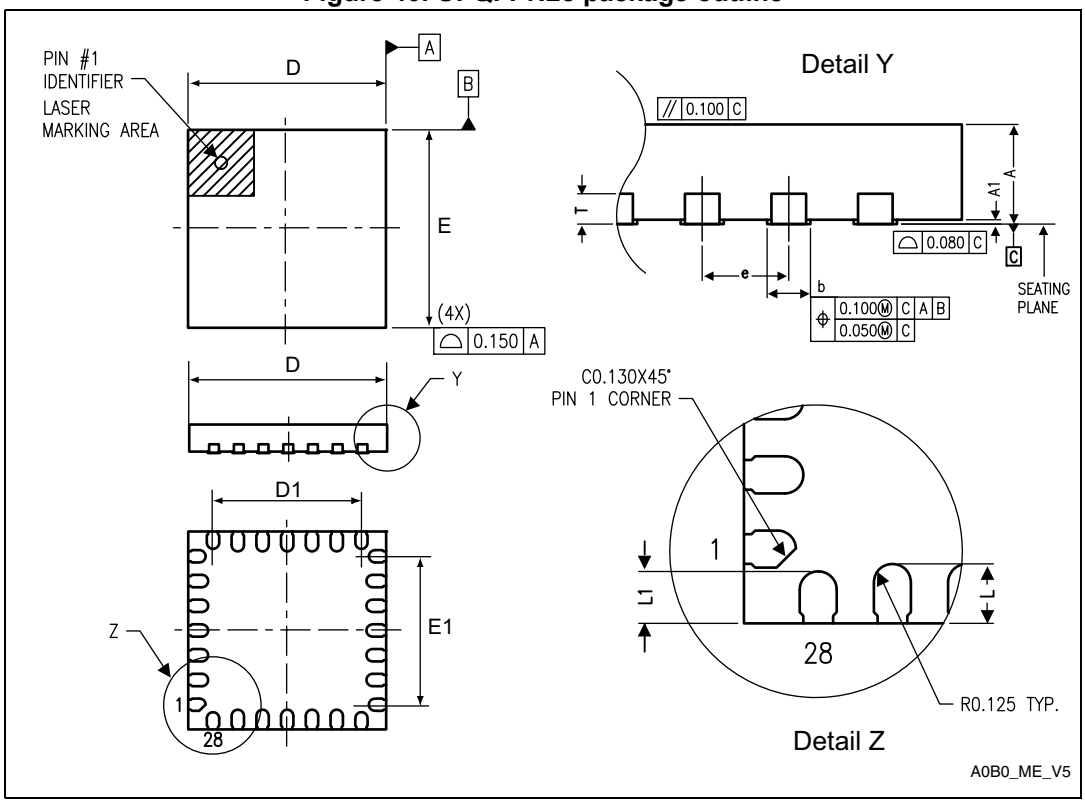

1. Drawing is not to scale.

Table 64. UFQFPN28 package mechanical data(1)

Symbol	millimeters			inches		
	Min	Typ	Max	Min	Typ	Max
A	0.500	0.550	0.600	0.0197	0.0217	0.0236
A1	-	0.000	0.050	-	0.0000	0.0020
D	3.900	4.000	4.100	0.1535	0.1575	0.1614
D1	2.900	3.000	3.100	0.1142	0.1181	0.1220
E	3.900	4.000	4.100	0.1535	0.1575	0.1614
E1	2.900	3.000	3.100	0.1142	0.1181	0.1220
L	0.300	0.400	0.500	0.0118	0.0157	0.0197
L1	0.250	0.350	0.450	0.0098	0.0138	0.0177
T	-	0.152	-	-	0.0060	-
b	0.200	0.250	0.300	0.0079	0.0098	0.0118
e	-	0.500	-	-	0.0197	-

1. Values in inches are converted from mm and rounded to 4 decimal digits.

Figure 41. Recommended footprint for UFQFPN28 package

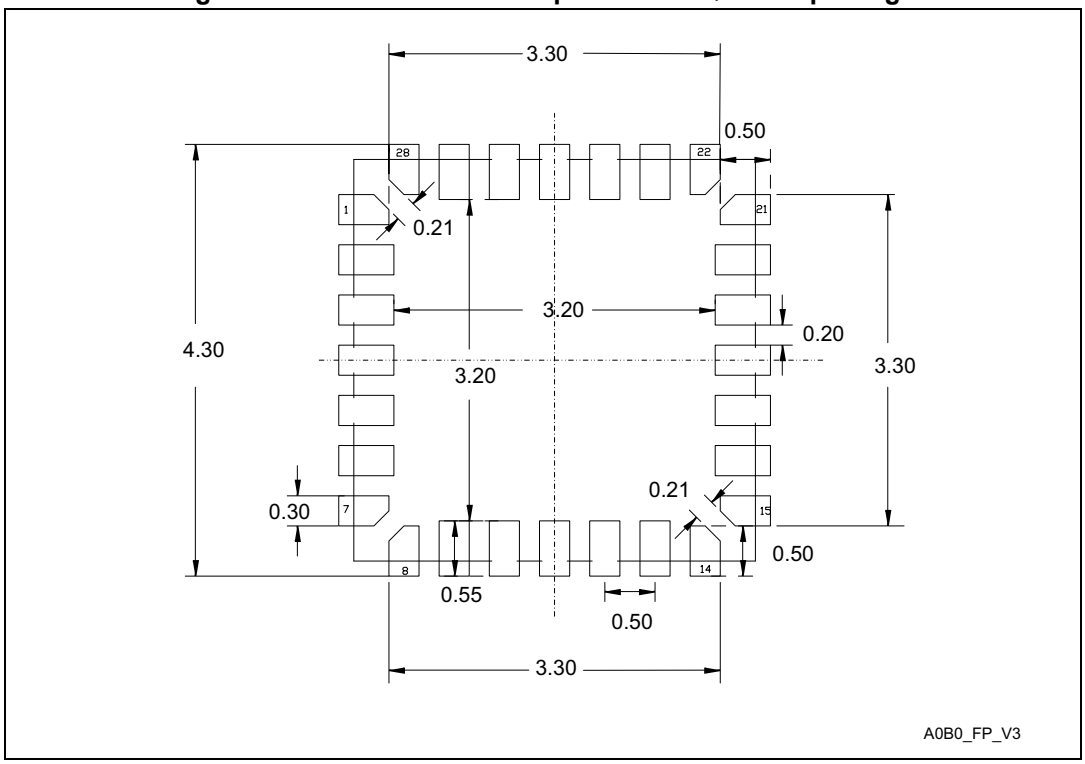

1. Dimensions are expressed in millimeters.

Device marking

The following figure gives an example of topside marking orientation versus pin 1 identifier location.

Other optional marking or inset/upset marks, which identify the parts throughout supply chain operations, are not indicated below.

Figure 42. UFQFPN28 package marking example

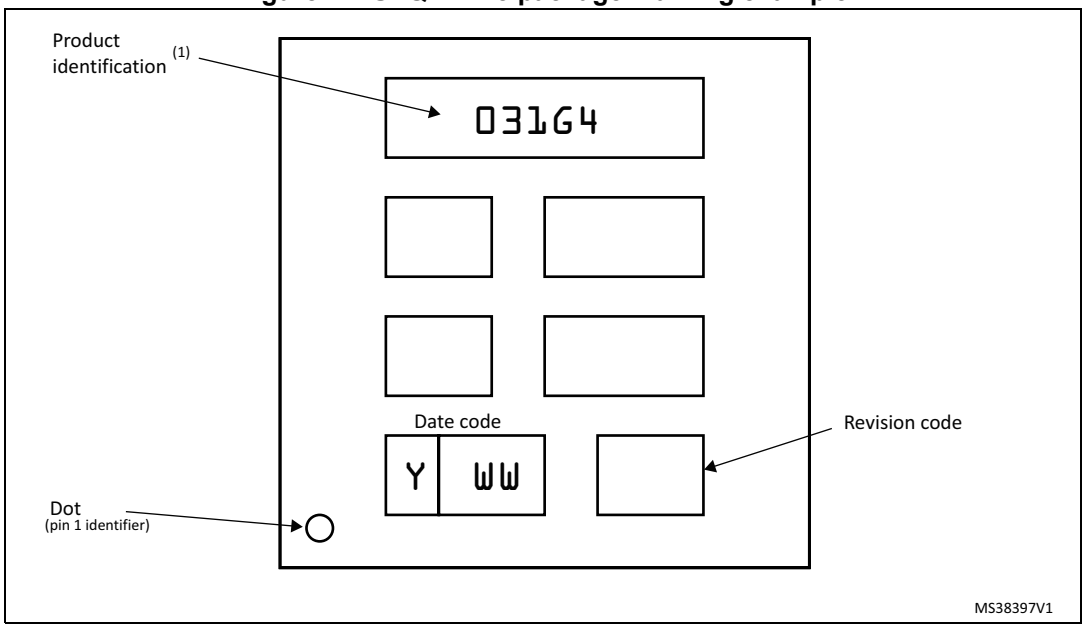

1. Parts marked as ES or E or accompanied by an Engineering Sample notification letter are not yet qualified and therefore not approved for use in production. ST is not responsible for any consequences resulting from such use. In no event will ST be liable for the customer using any of these engineering samples in production. ST's Quality department must be contacted prior to any decision to use these engineering samples to run a qualification activity.

7.5 WLCSP25 package information

WLCSP25 is a 25-ball, 2.423 x 2.325 mm, 0.4 mm pitch wafer level chip scale package.

Figure 43. WLCSP25 package outline

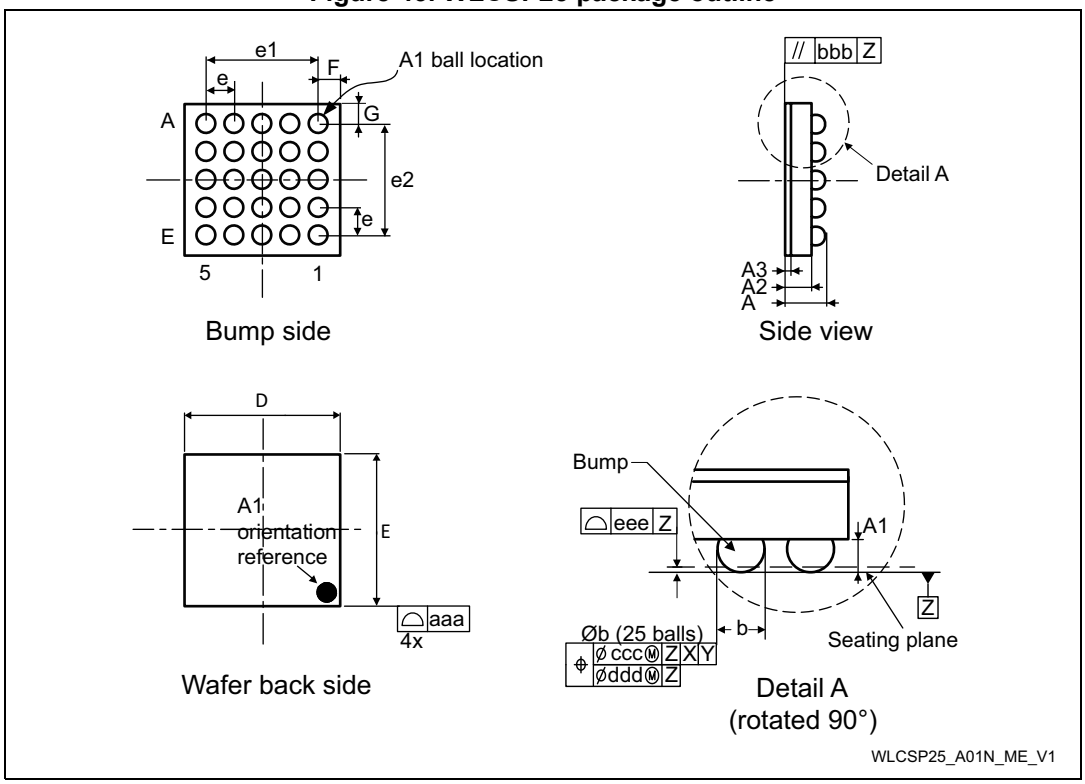

1. Drawing is not to scale.

Table 65. WLCSP25 package mechanical data

Symbol	millimeters			inches(1)		
	Min	Typ	Max	Min	Typ	Max
A	0.525	0.555	0.585	0.0207	0.0219	0.0230
A1	-	0.175	-	-	0.0069	-
A2	-	0.380	-	-	0.0150	-
A3(2)	-	0.025	-	-	0.0010	-
b(3) (4)	0.220	0.250	0.280	0.0087	0.0098	0.0110
D	2.388	2.423	2.458	0.0940	0.0954	0.0968
E	2.29	2.325	2.36	0.0902	0.0915	0.0929
e	-	0.400	-	-	0.0157	-
e1	-	1.600	-	-	0.0630	-
e2	-	1.600	-	-	0.0630	-
F	-	0.4115	-	-	0.0162	-
G	-	0.3625	-	-	0.0143	-

Table 65. WLCSP25 package mechanical data (continued)

Symbol	millimeters			inches[1]		
	Min	Typ	Max	Min	Typ	Max
aaa	-	0.100	-	-	0.0039	-
bbb	-	0.100	-	-	0.0039	-
ccc	-	0.100	-	-	0.0039	-
ddd	-	0.050	-	-	0.0020	-
eee	-	0.050	-	-	0.0020	-

1. Values in inches are converted from mm and rounded to 4 decimal digits.
2. Back side coating.
3. Dimension is measured at the maximum bump diameter parallel to primary datum Z.
4. Primary datum Z and seating plane are defined by the spherical crowns of the bump.

Figure 44. Recommended footprint for WLCSP25 package

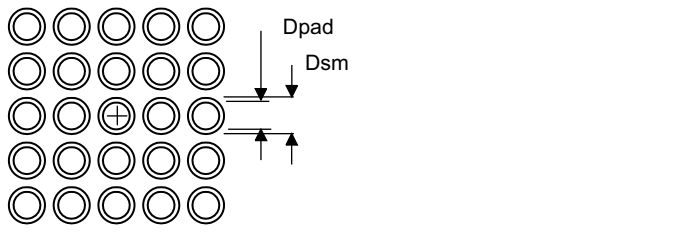

Table 66. WLCSP25 recommended PCB design rules

Dimension	Recommended values
Pitch	0.4 mm
Dpad	0.225 mm
Dsm	0.290 mm typ. (depends on the soldermask registration tolerance)
Stencil opening	0.250 mm
Stencil thickness	0.100 mm

Device marking

The following figure gives an example of topside marking orientation versus ball A1 identifier location.

Other optional marking or inset/upset marks, which identify the parts throughout supply chain operations, are not indicated below.

Figure 45. WLCSP25 package marking example

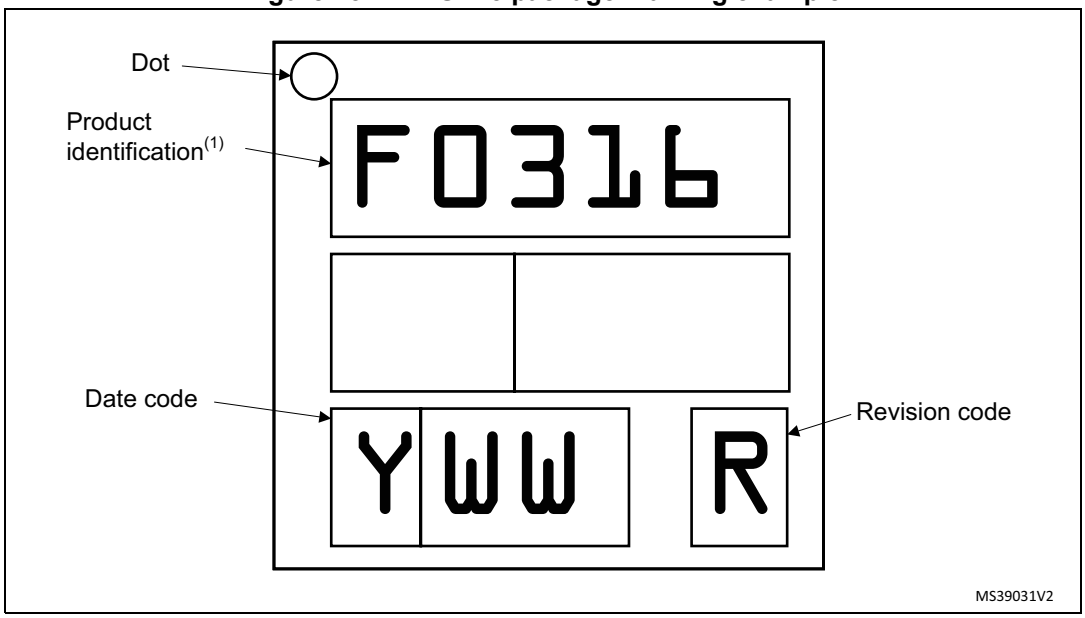

1. Parts marked as ES or E or accompanied by an Engineering Sample notification letter are not yet qualified and therefore not approved for use in production. ST is not responsible for any consequences resulting from such use. In no event will ST be liable for the customer using any of these engineering samples in production. ST's Quality department must be contacted prior to any decision to use these engineering samples to run a qualification activity.

7.6 TSSOP20 package information

TSSOP20 is a 20-lead thin shrink small-outline, 6.5 x 4.4 mm, 0.65 mm pitch, package.

Figure 46.TSSOP20 package outline

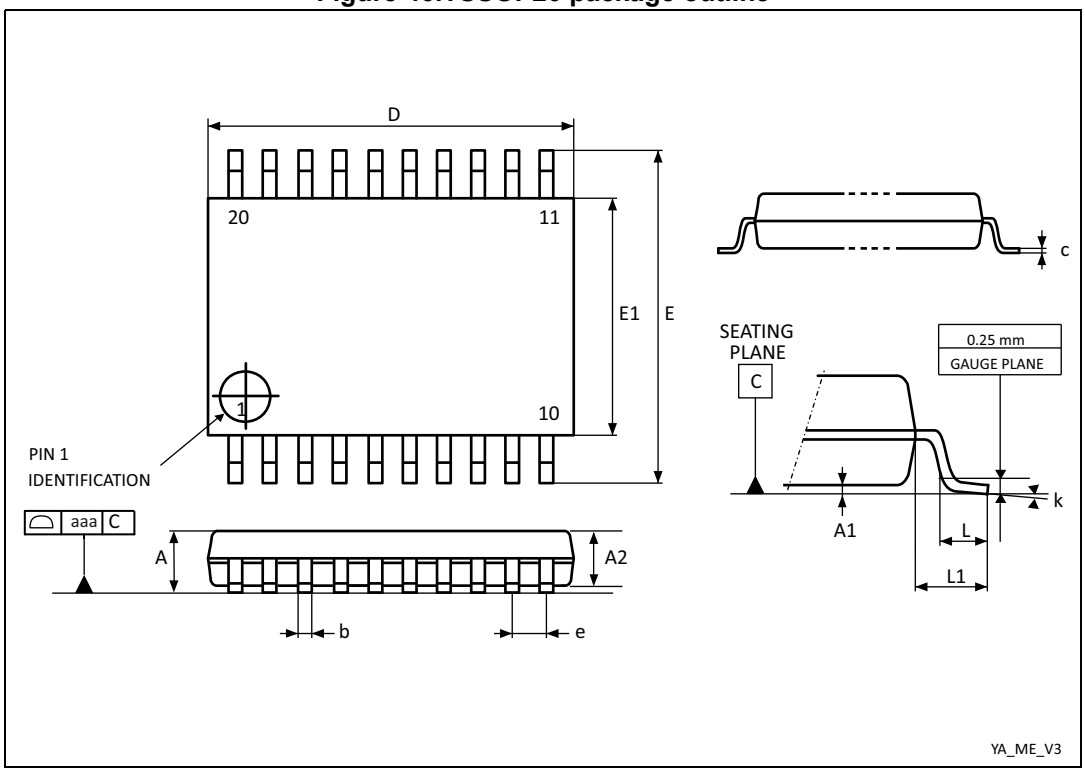

1. Drawing is not to scale.

Table 67. TSSOP20 package mechanical data

Symbol	millimeters			inches(1)		
	Min.	Typ.	Max.	Min.	Typ.	Max.
A	-	-	1.200	-	-	0.0472
A1	0.050	-	0.150	0.0020	-	0.0059
A2	0.800	1.000	1.050	0.0315	0.0394	0.0413
b	0.190	-	0.300	0.0075	-	0.0118
c	0.090	-	0.200	0.0035	-	0.0079
D(2)	6.400	6.500	6.600	0.2520	0.2559	0.2598
E	6.200	6.400	6.600	0.2441	0.2520	0.2598
E1(3)	4.300	4.400	4.500	0.1693	0.1732	0.1772
e	-	0.650	-	-	0.0256	-
L	0.450	0.600	0.750	0.0177	0.0236	0.0295
L1	-	1.000	-	-	0.0394	-

Table 67. TSSOP20 package mechanical data (continued)

Symbol	millimeters			inches[1]		
	Min.	Typ.	Max.	Min.	Typ.	Max.
k	0°	-	8°	0°	-	8°
aaa	-	-	0.100	-	-	0.0039

1. Values in inches are converted from mm and rounded to four decimal digits.
2. Dimension “D” does not include mold flash, protrusions or gate burrs. Mold flash, protrusions or gate burrs shall not exceed 0.15mm per side.
3. Dimension “E1” does not include interlead flash or protrusions. Interlead flash or protrusions shall not exceed 0.25mm per side.

Figure 47. Recommended footprint for TSSOP20 package

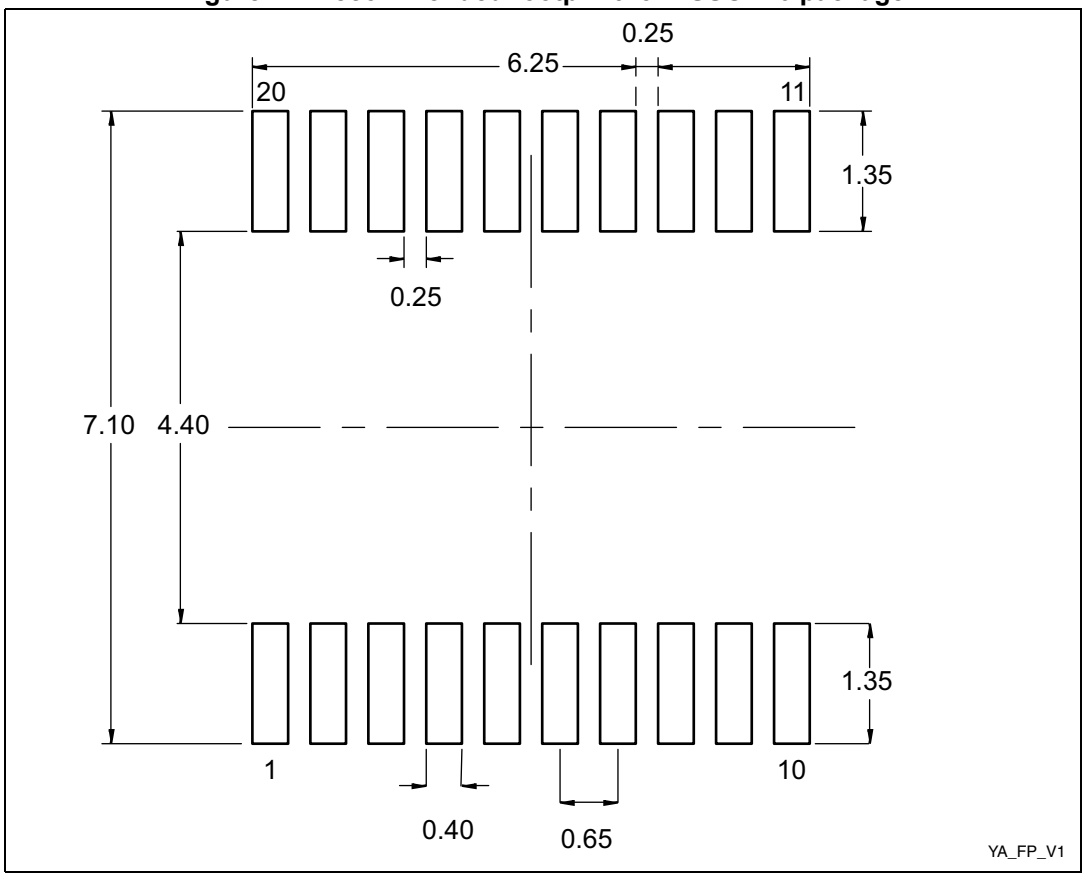

1. Dimensions are expressed in millimeters.

Device marking

The following figure gives an example of topside marking orientation versus pin 1 identifier location.

Other optional marking or inset/upset marks, which identify the parts throughout supply chain operations, are not indicated below.

Figure 48. TSSOP20 package marking example

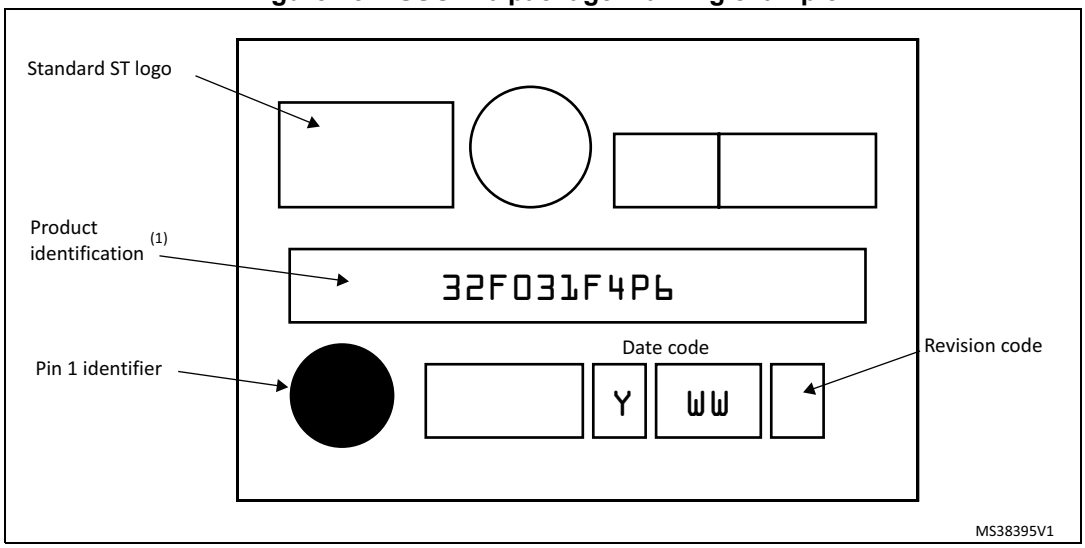

1. Parts marked as ES or E or accompanied by an Engineering Sample notification letter are not yet qualified and therefore not approved for use in production. ST is not responsible for any consequences resulting from such use. In no event will ST be liable for the customer using any of these engineering samples in production. ST's Quality department must be contacted prior to any decision to use these engineering samples to run a qualification activity.

7.7 Thermal characteristics

The maximum chip junction temperature ($T_J$max) must never exceed the values given in *Table 18: General operating conditions*.

The maximum chip-junction temperature, T_J max, in degrees Celsius, may be calculated using the following equation:

$$T_J \text{ max} = T_A \text{ max} + (P_D \text{ max} \times \Theta_{JA})$$

Where:

- T_A max is the maximum ambient temperature in °C,
- Θ_{JA} is the package junction-to-ambient thermal resistance, in °C/W,
- P_D max is the sum of P_{INT} max and $P_{I/O}$ max (P_D max = P_{INT} max + $P_{I/O}$max),
- P_{INT} max is the product of I_{DD} and V_{DD}, expressed in Watts. This is the maximum chip internal power.

$P_{I/O}$ max represents the maximum power dissipation on output pins where:

$$P_{I/O} \text{ max} = \Sigma (V_{OL} \times I_{OL}) + \Sigma ((V_{DDIOx} - V_{OH}) \times I_{OH}),$$

taking into account the actual V_{OL} / I_{OL} and V_{OH} / I_{OH} of the I/Os at low and high level in the application.

Table 68. Package thermal characteristics

Symbol	Parameter	Value	Unit
Θ_{JA}	**Thermal resistance junction-ambient** LQFP48 - 7 × 7 mm	55	°C/W
	Thermal resistance junction-ambient UFQFPN32 - 5 × 5 mm	38	
	Thermal resistance junction-ambient LQFP32 - 7 × 7 mm	56	
	Thermal resistance junction-ambient UFQFPN28 - 4 × 4 mm	118	
	Thermal resistance junction-ambient WLCSP25 - 2.13 x 2.07 mm	74	
	Thermal resistance junction-ambient TSSOP20 - 6.5 x 4.4 mm	110	

7.7.1 Reference document

JESD51-2 Integrated Circuits Thermal Test Method Environment Conditions - Natural Convection (Still Air). Available from www.jedec.org

7.7.2 Selecting the product temperature range

When ordering the microcontroller, the temperature range is specified in the ordering information scheme shown in *Section 8: Ordering information*.

Each temperature range suffix corresponds to a specific guaranteed ambient temperature at maximum dissipation and, to a specific maximum junction temperature.

As applications do not commonly use the STM32F031x4/x6 at maximum dissipation, it is useful to calculate the exact power consumption and junction temperature to determine which temperature range will be best suited to the application.

The following examples show how to calculate the temperature range needed for a given application.

Example 1: High-performance application

Assuming the following application conditions:

Maximum ambient temperature T_{Amax} = 80 °C (measured according to JESD51-2), I_{DDmax} = 50 mA, V_{DD} = 3.5 V, maximum 20 I/Os used at the same time in output at low level with I_{OL} = 8 mA, V_{OL}= 0.4 V and maximum 8 I/Os used at the same time in output at low level with I_{OL} = 20 mA, V_{OL}= 1.3 V

P_{INTmax} = 50 mA × 3.5 V= 175 mW

P_{IOmax} = 20 × 8 mA × 0.4 V + 8 × 20 mA × 1.3 V = 272 mW

This gives: P_{INTmax} = 175 mW and P_{IOmax} = 272 mW:

P_{Dmax} = 175 + 272 = 447 mW

Using the values obtained in *Table 68* T_{Jmax} is calculated as follows:

– For LQFP48, 55 °C/W

T_{Jmax} = 80 °C + (55°C/W × 447 mW) = 80 °C + 24.585 °C = 104.585 °C

This is within the range of the suffix 6 version parts (–40 < T_J < 105 °C) see *Table 18: General operating conditions*.

In this case, parts must be ordered at least with the temperature range suffix 6 (see *Section 8: Ordering information*).

Note: With this given P_{Dmax} we can find the TAmax allowed for a given device temperature range (order code suffix 6 or 7).

Suffix 6: T_{Amax} = T_{Jmax} - (55°C/W × 447 mW) = 105-24.585 = 80.415 °C

Suffix 7: T_{Amax} = T_{Jmax} - (55°C/W × 447 mW) = 125-24.585 = 100.415 °C

Example 2: High-temperature application

Using the same rules, it is possible to address applications that run at high ambient temperatures with a low dissipation, as long as junction temperature T_J remains within the specified range.

Assuming the following application conditions:

Maximum ambient temperature T_{Amax} = 100 °C (measured according to JESD51-2), I_{DDmax} = 20 mA, V_{DD} = 3.5 V, maximum 20 I/Os used at the same time in output at low level with I_{OL} = 8 mA, V_{OL}= 0.4 V

P_{INTmax} = 20 mA × 3.5 V= 70 mW

P_{IOmax} = 20 × 8 mA × 0.4 V = 64 mW

This gives: P_{INTmax} = 70 mW and P_{IOmax} = 64 mW:

P_{Dmax} = 70 + 64 = 134 mW

Thus: P_{Dmax} = 134 mW

Using the values obtained in *Table 68* T_{Jmax} is calculated as follows:

– For LQFP48, 55 °C/W

T_{Jmax} = 100 °C + (55 °C/W × 134 mW) = 100 °C + 7.37 °C = 107.37 °C

This is above the range of the suffix 6 version parts (–40 < T_J < 105 °C).

In this case, parts must be ordered at least with the temperature range suffix 7 (see *Section 8: Ordering information*) unless we reduce the power dissipation in order to be able to use suffix 6 parts.

8 Ordering information

For a list of available options (memory, package, and so on) or for further information on any aspect of this device, please contact your nearest ST sales office.

Table 69. Ordering information scheme

Example: STM32 F 031 G 6 T 6 x

Device family
STM32 = ARM-based 32-bit microcontroller

Product type
F = General-purpose

Sub-family
031 = STM32F031xx

Pin count
F = 20 pins
E = 25 pins
G = 28 pins
K = 32 pins
C = 48 pins

User code memory size
4 = 16 Kbyte
6 = 32 Kbyte

Package
P = TSSOP
U = UFQFPN
T = LQFP
Y = WLCSP

Temperature range
6 = –40 °C to +85 °C
7 = –40 °C to +105 °C

Options
xxx = code ID of programmed parts (includes packing type)
TR = tape and reel packing
blank = tray packing

9 Revision history

Table 70. Document revision history

Date	Revision	Changes
13-Jan-2014	1	Initial release.
11-Jul-2014	2	Changed the document status to Datasheet - production data. Updated the following: – *Table: STM32F031x4/6 family device features and peripheral counts,* – *Figure: Clock tree*, – *Figure: Power supply scheme*, – *Table: Peripheral current consumption*. Replaced *Table Typical current consumption in Run mode, code with data processing running from Flash* and *Table Typical current consumption in Sleep mode, code running from Flash or RAM* with *Table: Typical current consumption, code executing from Flash, running from HSE 8 MHz crystal.* Added the LQFP32 package: updates in *Section: Description, Section: Pinouts and pin description* and *Section: Package information.*
28-Aug-2015	3	**Updated:** – *Figure 9: STM32F031x6 memory map* – AF1 alternate functions for PA0, PA1, PA2, PA3 and PA4 in *Table 12: Alternate functions selected through GPIOA_AFR registers for port A* – the footnote for V_{IN} max value in *Table 15: Voltage characteristics* – the footnote for max V_{IN} in *Table 18: General operating conditions* – *Table 22: Embedded internal reference voltage* with the addition of t_{START} parameter – *Table 50: ADC characteristics* – *Table 53: TS characteristics*: removed the min. value for t_{START} parameter – the typical value for R parameter in *Table 54: VBAT monitoring characteristics* – the structure of *Section 7: Package information*. **Added:** – *Figure 33: LQFP48 marking example (package top view), Figure 36: LQFP32 marking example (package top view), Figure 39: UFQFPN32 marking example (package top view), Figure 42: UFQFPN28 marking example (package top view), Figure 48: TSSOP20 marking example (package top view)*

Table 70. Document revision history (continued)

Date	Revision	Changes
28-Aug-2015	3 (continued)	Added WLCSP25 package, updates in the following: – *Table 1: Device summary*, – *Section 2: Description*, – *Table 2: STM32F031x4/x6 family device features and peripheral counts*, – *Section 4: Pinouts and pin description*: addition of *Figure 7: WLCSP25 25-ball package ballout (bump side)* and update of *Table 11: Pin definitions*, – *Table 18: General operating conditions*, – *Section 7: Package information* with the addition of *Section 7.5: WLCSP25 package information*, – *Table 68: Package thermal characteristics*.
16-Dec-2015	4	**Cover page:** – number of timers added in the title – *Table 1: Device summary* - STM32F031x4 added ***Section 2: Description:*** – *Figure 1: Block diagram* updated ***Section 3: Functional overview:*** – *Figure 2: Clock tree* updated – *Section 3.5.4: Low-power modes* - added explicit inf. on peripherals configurable to operate with HSI – *Section 3.10.2: Internal voltage reference (V_{REFINT})* - removed information on comparators – *Section 3.11.2: General-purpose timers (TIM2, 3, 14, 16, 17)* - number of gen-purpose timers corrected – *Table 7: STM32F031x4/x6 I^2C implementation* - added 20mA output drive current ***Section 4: Pinouts and pin description*:** – Package pinout figures updated (look and feel) – *Figure 7: WLCSP25 package pinout* - **now presented in top view** – *Table 11: Pin definitions* - notes 3 and 6 added ***Section 5: Memory mapping:*** – added information on memory mapping difference of STM32F031x4 from STM32F031x6 ***Section 6: Electrical characteristics***: – *Table 22: Embedded internal reference voltage:* removed -40°-to-85° condition and associated note for V_{REFINT} – *Table 25* and *Table 26* values rounded to 1 decimal – *Table 46: I/O static characteristics* - removed note – *Table 50: ADC characteristics* - updated some parameter values, test conditions and added footnotes (3) and (4)

Table 70. Document revision history (continued)

Date	Revision	Changes
16-Dec-2015	4 (continued)	– *Section 6.3.16: 12-bit ADC characteristics* - changed introductory sentence – *Table 60: I^2S characteristics:* table reorganized, $t_{v(SD_ST)}$ max value updated ***Section 7: Package information*:** – *Figure 41: Recommended footprint for UFQFPN28 package* updated ***Section 8: Part numbering*:** – added tray packing to options
06-Jan-2017	5	***Section 6: Electrical characteristics*:** – *Table 34: LSE oscillator characteristics (f_{LSE} = 32.768 kHz)* - information on configuring different drive capabilities removed. See the corresponding reference manual. – *Table 22: Embedded internal reference voltage* - V_{REFINT} values – *Figure 26: SPI timing diagram - slave mode and CPHA = 0* and *Figure 27: SPI timing diagram - slave mode and CPHA = 1* enhanced and corrected ***Section 8: Ordering information*:** – The name of the section changed from the previous “Part numbering”
15-May-2017	6	***Section 7: Package information*:** – *Figure 45: WLCSP25 package marking example* - the composition of the package marking fields and character sizes corrected. Check the product errata sheet for additional information. – Notes under package marking figures modified.

IMPORTANT NOTICE – PLEASE READ CAREFULLY

STMicroelectronics NV and its subsidiaries (“ST”) reserve the right to make changes, corrections, enhancements, modifications, and improvements to ST products and/or to this document at any time without notice. Purchasers should obtain the latest relevant information on ST products before placing orders. ST products are sold pursuant to ST’s terms and conditions of sale in place at the time of order acknowledgement.

Purchasers are solely responsible for the choice, selection, and use of ST products and ST assumes no liability for application assistance or the design of Purchasers’ products.

No license, express or implied, to any intellectual property right is granted by ST herein.

Resale of ST products with provisions different from the information set forth herein shall void any warranty granted by ST for such product.

ST and the ST logo are trademarks of ST. All other product or service names are the property of their respective owners.

Information in this document supersedes and replaces information previously supplied in any prior versions of this document.

© 2017 STMicroelectronics – All rights reserved