19-1155; Rev 5; 8/10

EVALUATION KIT AVAILABLE

# +2.7V, Low-Power, 12-Bit Serial ADCs in 8-Pin SO

MAX1240/MAX1241

## General Description

The MAX1240/MAX1241 low-power, 12-bit analog-to-digital converters (ADCs) are available in 8-pin packages. The MAX1240 operates with a single +2.7V to +3.6V supply, and the MAX1241 operates with a single +2.7V to +5.25V supply. Both devices feature a 7.5µs successive-approximation ADC, a fast track/hold (1.5µs), an on-chip clock, and a high-speed, 3-wire serial interface.

Power consumption is only 37mW ($V_{DD}$ = 3V) at the 73ksps maximum sampling speed. A 2µA shutdown mode reduces power at slower throughput rates.

The MAX1240 has an internal 2.5V reference, while the MAX1241 requires an external reference. The MAX1241 accepts signals from 0V to $V_{REF}$, and the reference input range includes the positive supply rail. An external clock accesses data from the 3-wire interface, which connects directly to standard microcontroller I/O ports. The interface is compatible with SPI™, QSPI™, and MICROWIRE™.

Excellent AC characteristics and very low power combined with ease of use and small package size make these converters ideal for remote-sensor and data-acquisition applications, or for other circuits with demanding power consumption and space requirements. The MAX1240/MAX1241 are available in 8-pin PDIP and SO packages.

## Applications

Battery-Powered Systems

Portable Data Logging

Isolated Data Acquisition

Process Control

Instrumentation

## Pin Configuration

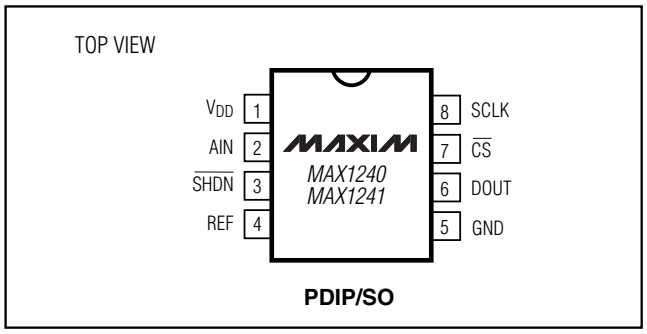


## Features

- ♦ **Single-Supply Operation:**
  **+2.7V to +3.6V (MAX1240)**
  **+2.7V to +5.25V (MAX1241)**
- ♦ **12-Bit Resolution**
- ♦ **Internal 2.5V Reference (MAX1240)**
- ♦ **Small Footprint: 8-Pin PDIP/SO Packages**
- ♦ **Low Power: 3.7µW (73ksps, MAX1240)**
  **3mW (73ksps, MAX1241)**
  **66µW (1ksps, MAX1241)**
  **5µW (power-down mode)**
- ♦ **Internal Track/Hold**
- ♦ **SPI/QSPI/MICROWIRE 3-Wire Serial Interface**
- ♦ **Internal Clock**

## Ordering Information

| PART* | TEMP RANGE | PIN-PACKAGE | INL (LSB) |
|---|---|---|---|
| **MAX1240**ACPA+ | 0°C to +70°C | 8 PDIP | ±1/2 |
| MAX1240BCPA+ | 0°C to +70°C | 8 PDIP | ±1 |
| MAX1240CCPA+ | 0°C to +70°C | 8 PDIP | ±1 |
| MAX1240ACSA+ | 0°C to +70°C | 8 SO | ±1/2 |
| MAX1240BCSA+ | 0°C to +70°C | 8 SO | ±1 |
| MAX1240CCSA+ | 0°C to +70°C | 8 SO | ±1 |
| MAX1240CC/D | 0°C to +70°C | Dice* | ±1 |
| MAX1240AESA/V+** | -40°C to +85°C | 8 SO | ±1/2 |
| MAX1240BESA/V+ | -40°C to +85°C | 8 SO | ±1 |

***Ordering Information continued at end of data sheet.***

**Dice are specified at $T_A$ = +25°C, DC parameters only.*
***Future product—contact factory for availability.*
*/V denotes an automotive qualified part.*
*+Denotes a lead(Pb)-free/RoHS-compliant package.*

## Functional Diagram

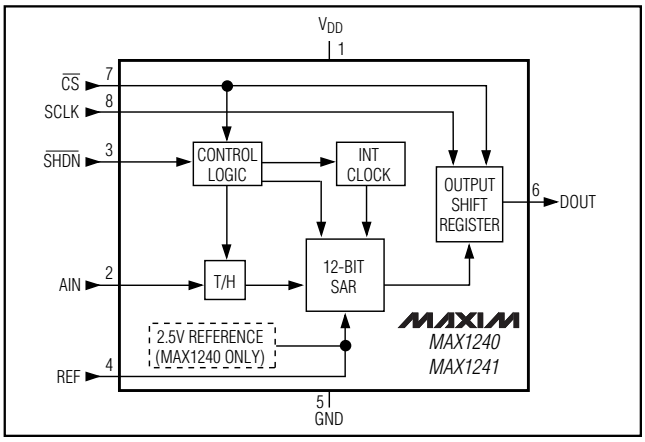


*SPI and QSPI are trademarks of Motorola, Inc. MICROWIRE is a trademark of National Semiconductor Corp.*



***For pricing, delivery, and ordering information, please contact Maxim Direct at 1-888-629-4642, or visit Maxim's website at www.maxim-ic.com.***

# +2.7V, Low-Power, 12-Bit Serial ADCs in 8-Pin SO

## ABSOLUTE MAXIMUM RATINGS

$V_{DD}$ to GND .....-0.3V to +6V
AIN to GND .....-0.3V to ($V_{DD}$ + 0.3V)
REF to GND .....-0.3V to ($V_{DD}$ + 0.3V)
Digital Inputs to GND.....-0.3V to +6V
DOUT to GND.....-0.3V to ($V_{DD}$ + 0.3V)
DOUT Current .....±25mA
Continuous Power Dissipation ($T_A$ = +70°C)
Plastic DIP (derate 9.09mW/°C above +70°C) .....727mW
SO (derate 5.88mW/°C above +70°C).....471mW
CERDIP (derate 8.00mW/°C above +70°C).....640mW

Operating Temperature Ranges
MAX1240_C_A/MAX1241_C_A .....0°C to +70°C
MAX1240_E_ A/MAX1241_E_ A .....-40°C to +85°C
MAX1240_MJA/MAX1241_MJA .....-55°C to +125°C
Storage Temperature Range.....-60°C to +150°C
Lead Temperature (soldering, 10s).....+300°C
Soldering Temperature (reflow)
PDIP, SO .....+260°C
CDIP .....+250°C

*Stresses beyond those listed under "Absolute Maximum Ratings" may cause permanent damage to the device. These are stress ratings only, and functional operation of the device at these or any other conditions beyond those indicated in the operational sections of the specifications is not implied. Exposure to absolute maximum rating conditions for extended periods may affect device reliability.*

## ELECTRICAL CHARACTERISTICS

($V_{DD}$ = +2.7V to +3.6V (MAX1240); $V_{DD}$ = +2.7V to +5.25V (MAX1241); 73ksps, $f_{SCLK}$ = 2.1MHz (50% duty cycle); MAX1240—4.7µF capacitor at REF pin, MAX1241—external reference; $V_{REF}$ = 2.500V applied to REF pin; $T_A$ = $T_{MIN}$ to $T_{MAX}$; unless otherwise noted.)

| PARAMETER | SYMBOL | CONDITIONS | | MIN | TYP | MAX | UNITS |
|---|---|---|---|---|---|---|---|
| **DC ACCURACY** (Note 1) | | | | | | | |
| Resolution | | | | 12 | | | Bits |
| Relative Accuracy (Note 2) | INL | MAX124_A | | | | ±0.5 | LSB |
| | | MAX124_B/C | | | | ±1.0 | |
| Differential Nonlinearity | DNL | No missing codes over temperature | | | | ±1 | LSB |
| Offset Error | | MAX124_A | | | ±0.5 | ±3.0 | LSB |
| | | MAX124_B/C | | | ±0.5 | ±4.0 | |
| Gain Error (Note 3) | | | | | ±0.5 | ±4.0 | LSB |
| Gain Temperature Coefficient | | | | | ±0.25 | | ppm/°C |
| **DYNAMIC SPECIFICATIONS** (10kHz sine-wave input, 0V to 2.500Vp-p, 73ksps, $f_{SCLK}$ = 2.1MHz) | | | | | | | |
| Signal-to-Noise Plus Distortion Ratio | SINAD | MAX124_A/B | | 70 | | | dB |
| | | MAX124_C | | | 71.5 | | |
| Total Harmonic Distortion | THD | Up to the 5th harmonic | MAX124_A/B | | | -80 | dB |
| | | | MAX124_C | | -88 | | |
| Spurious-Free Dynamic Range | SFDR | MAX124_A/B | | 80 | | | dB |
| | | MAX124_C | | | 88 | | |
| Small-Signal Bandwidth | | -3dB rolloff | | | 2.25 | | MHz |
| Full-Power Bandwidth | | | | | 1.0 | | MHz |
| **CONVERSION RATE** | | | | | | | |
| Conversion Time | $t_{CONV}$ | | | 5.5 | | 7.5 | µs |
| Track/Hold Acquisition Time | $t_{ACQ}$ | | | | | 1.5 | µs |
| Throughput Rate | | $f_{SCLK}$ = 2.1MHz | | | | 73 | ksps |
| Aperture Delay | $t_{APR}$ | Figure 8 | | | 30 | | ns |
| Aperture Jitter | | | | | <50 | | ps |
| **ANALOG INPUT** | | | | | | | |
| Input Voltage Range | | | | 0 | | $V_{REF}$ | V |
| Input Capacitance | | | | | 16 | | pF |

## ELECTRICAL CHARACTERISTICS (continued)

($V_{DD}$ = +2.7V to +3.6V (MAX1240); $V_{DD}$ = +2.7V to +5.25V (MAX1241); 73ksps, $f_{SCLK}$ = 2.1MHz (50% duty cycle); MAX1240—4.7µF capacitor at REF pin, MAX1241—external reference; $V_{REF}$ = 2.500V applied to REF pin; $T_A$ = $T_{MIN}$ to $T_{MAX}$; unless otherwise noted.)

| PARAMETER | SYMBOL | CONDITIONS | MIN | TYP | MAX | UNITS |
|---|---|---|---|---|---|---|
| **INTERNAL REFERENCE** (MAX1240 only) | | | | | | |
| REF Output Voltage | | $T_A$ = +25°C | 2.480 | 2.500 | 2.520 | V |
| REF Short-Circuit Current | | | | | 30 | mA |
| REF Temperature Coefficient | | MAX1240AC/BC | | ±30 | ±50 | ppm/°C |
| | | MAX1240AE/BE | | ±30 | ±60 | |
| | | MAX1240AM/BM | | ±30 | ±80 | |
| | | MAX1240C | | ±30 | | |
| Load Regulation (Note 4) | | 0mA to 0.2mA output load | | 0.35 | | |
| Capacitive Bypass at REF | | | 4.7 | | | µF |
| **EXTERNAL REFERENCE** ($V_{REF}$ = 2.500V) | | | | | | |
| Input Voltage Range | | | 1.00 | | $V_{DD}$ + 50mV | V |
| Input Current | | | | 100 | 150 | µA |
| Input Resistance | | | 18 | 25 | | kΩ |
| REF Input Current in Shutdown | | $V_{\overline{SHDN}}$ = 0V | | ±0.01 | 10 | µA |
| Capacitive Bypass at REF | | | 0.1 | | | µF |
| **DIGITAL INPUTS: SCLK, $\overline{CS}$, $\overline{SHDN}$** | | | | | | |
| SCLK, $\overline{CS}$ Input High Voltage | $V_{IH}$ | $V_{DD}$ ≤ 3.6V | 2.0 | | | V |
| | | $V_{DD}$ > 3.6V (MAX1241) | 3.0 | | | |
| SCLK, $\overline{CS}$ Input Low Voltage | $V_{IL}$ | | | | 0.8 | V |
| SCLK, $\overline{CS}$ Input Hysteresis | $V_{HYST}$ | | | 0.2 | | V |
| SCLK, $\overline{CS}$ Input Leakage | $I_{IN}$ | $V_{IN}$ = 0V or $V_{DD}$ | | ±0.01 | ±1 | µA |
| SCLK, $\overline{CS}$ Input Capacitance | $C_{IN}$ | (Note 5) | | | 15 | pF |
| $\overline{SHDN}$ Input High Voltage | $V_{SH}$ | | $V_{DD}$ - 0.4 | | | V |
| $\overline{SHDN}$ Input Low Voltage | $V_{SL}$ | | | | 0.4 | V |
| $\overline{SHDN}$ Input Current | | $V_{\overline{SHDN}}$ = 0V or $V_{DD}$ | | | ±4.0 | µA |
| $\overline{SHDN}$ Input Mid Voltage | $V_{SM}$ | | 1.1 | | $V_{DD}$ - 1.1 | V |
| $\overline{SHDN}$ Voltage, Unconnected | $V_{FLT}$ | $\overline{SHDN}$ = unconnected | | $V_{DD}$/2 | | V |
| $\overline{SHDN}$ Max Allowed Leakage, Mid Input | | $\overline{SHDN}$ = unconnected | | | ±100 | nA |
| **DIGITAL OUTPUT: DOUT** | | | | | | |
| Output Voltage Low | $V_{OL}$ | $I_{SINK}$ = 5mA | | | 0.4 | V |
| | | $I_{SINK}$ = 16mA | | | 0.8 | |
| Output Voltage High | $V_{OH}$ | $I_{SOURCE}$ = 0.5mA | $V_{DD}$ - 0.5 | | | V |
| Three-State Leakage Current | $I_L$ | $\overline{CS}$ = $V_{DD}$ | | ±0.01 | ±10 | µA |
| Three-State Output Capacitance | $C_{OUT}$ | $\overline{CS}$ = $V_{DD}$ (Note 5) | | | 15 | pF |

# +2.7V, Low-Power, 12-Bit Serial ADCs in 8-Pin SO

## ELECTRICAL CHARACTERISTICS (continued)

($V_{DD}$ = +2.7V to +3.6V (MAX1240); $V_{DD}$ = +2.7V to +5.25V (MAX1241); 73ksps, $f_{SCLK}$ = 2.1MHz (50% duty cycle); MAX1240—4.7µF capacitor at REF pin, MAX1241—external reference; $V_{REF}$ = 2.500V applied to REF pin; $T_A$ = $T_{MIN}$ to $T_{MAX}$; unless otherwise noted.)

| PARAMETERS | SYMBOL | CONDITIONS | | | MIN | TYP | MAX | UNITS |
|---|---|---|---|---|---|---|---|---|
| **POWER REQUIREMENTS** | | | | | | | | |
| Supply Voltage | $V_{DD}$ | MAX1240 | | | 2.7 | | 3.6 | V |
| | | MAX1241 | | | 2.7 | | 5.25 | |
| Supply Current | $I_{DD}$ | Operating mode | MAX1240A/B | $V_{DD}$ = 3.6V | | 1.4 | 2.0 | mA |
| | | | MAX1240C | | | 1.4 | 3.5 | |
| | | | MAX1241A/B | $V_{DD}$ = 3.6V | | 0.9 | 1.5 | |
| | | | | $V_{DD}$ = 5.25V | | 1.6 | 2.5 | |
| | | | MAX1241C | $V_{DD}$ = 3.6V | | 0.9 | 2.8 | |
| | | | | $V_{DD}$ = 5.25V | | 1.6 | 3.8 | |
| | | Power-down, digital inputs at 0V or $V_{DD}$ | | $V_{DD}$ = 3.6V | | 1.9 | 10 | µA |
| | | | | $V_{DD}$ = 5.25V | | 3.5 | 15 | |
| Supply Rejection | PSR | (Note 5) | | | | ±0.3 | | mV |

## TIMING CHARACTERISTICS (Figure 8)

($V_{DD}$ = +2.7V to +3.6V (MAX1240); $V_{DD}$ = +2.7V to +5.25V (MAX1241); $T_A$ = $T_{MIN}$ to $T_{MAX}$, unless otherwise noted.)

| PARAMETERS | SYMBOL | CONDITIONS | | MIN | TYP | MAX | UNITS |
|---|---|---|---|---|---|---|---|
| Acquisition Time | $t_{ACQ}$ | $\overline{CS}$ = $V_{DD}$ (Note 6) | | 1.5 | | | µs |
| SCLK Fall to Output Data Valid | $t_{DO}$ | Figure 1, $C_{LOAD}$ = 50pF | MAX124_ _C/E | 20 | | 200 | ns |
| | | | MAX124_ _M | 20 | | 240 | |
| $\overline{CS}$ Fall to Output Enable | $t_{DV}$ | Figure 1, $C_{LOAD}$ = 50pF | | | | 240 | ns |
| $\overline{CS}$ Rise to Output Disable | $t_{TR}$ | Figure 2, $C_{LOAD}$ = 50pF | | | | 240 | ns |
| SCLK Clock Frequency | $f_{SCLK}$ | | | 0 | | 2.1 | MHz |
| SCLK Pulse Width High | $t_{CH}$ | | | 200 | | | ns |
| SCLK Pulse Width Low | $t_{CL}$ | | | 200 | | | ns |
| SCLK Low to $\overline{CS}$ Fall Setup Time | $t_{CS0}$ | | | 50 | | | ns |
| DOUT Rise to SCLK Rise (Note 5) | $t_{STR}$ | | | 0 | | | ns |
| $\overline{CS}$ Pulse Width | $t_{CS}$ | | | 240 | | | ns |

**Note 1:** Tested at $V_{DD}$ = +2.7V.
**Note 2:** Relative accuracy is the deviation of the analog value at any code from its theoretical value after the full-scale range and offset have been calibrated.
**Note 3:** MAX1240—internal reference, offset nulled; MAX1241—external reference ($V_{REF}$ = +2.500V), offset nulled.
**Note 4:** External load should not change during conversion for specified accuracy.
**Note 5:** Guaranteed by design. Not subject to production testing.
**Note 6:** Measured as [$V_{FS}$(2.7V) - $V_{FS}$($V_{DD(MAX)}$)].
**Note 7:** To guarantee acquisition time, $t_{ACQ}$ is the maximum time the device takes to acquire the signal, and is also the minimum time needed for the signal to be acquired.

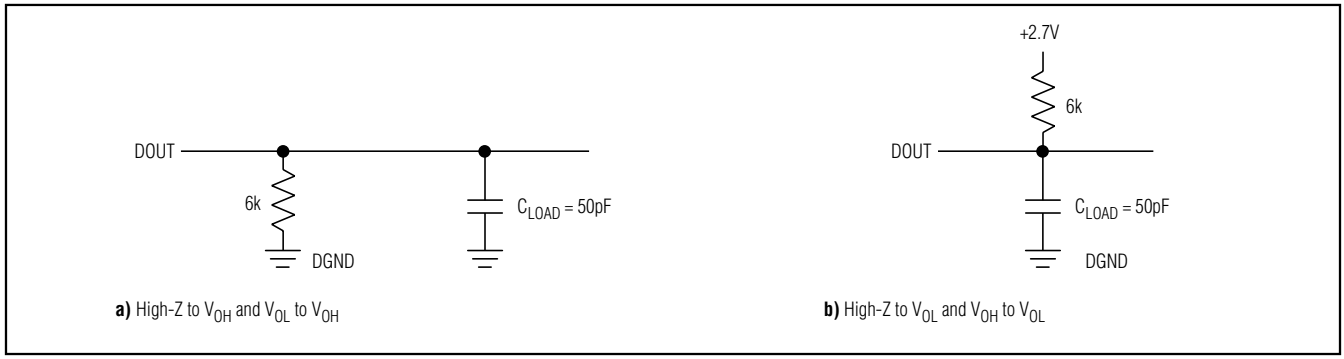


*Figure 1. Load Circuits for DOUT Enable Time*

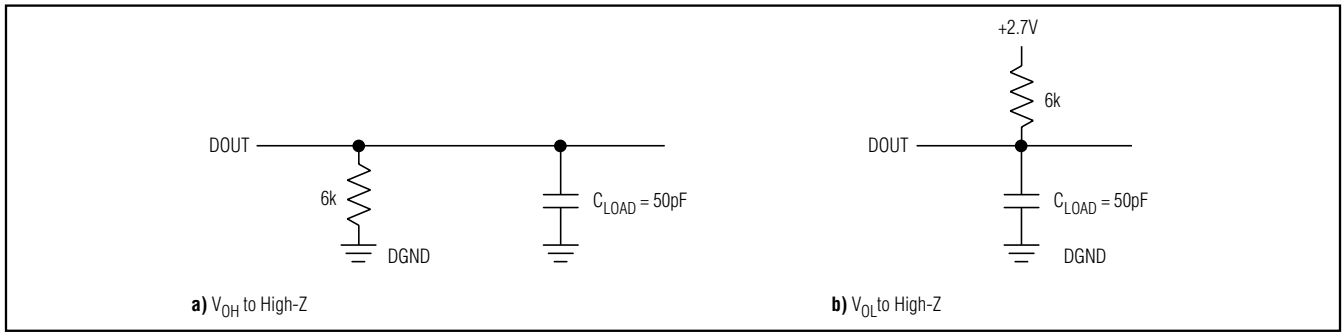


*Figure 2. Load Circuits for DOUT Disable Time*

## Typical Operating Characteristics

($V_{DD}$ = 3.0V, $V_{REF}$ = 2.5V, $f_{SCLK}$ = 2.1MHz, $C_L$ = 20pF, $T_A$ = +25°C, unless otherwise noted.)

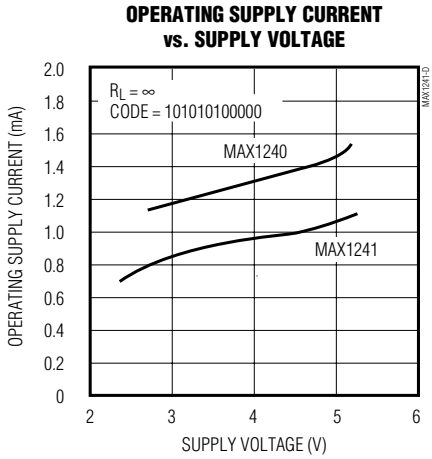


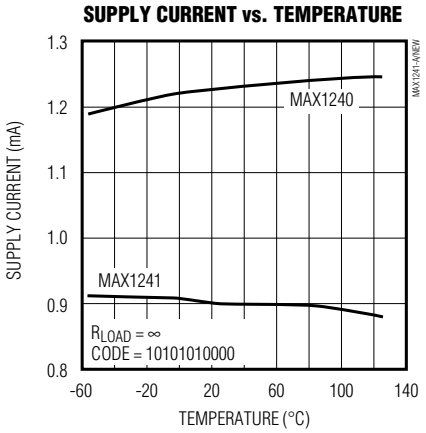


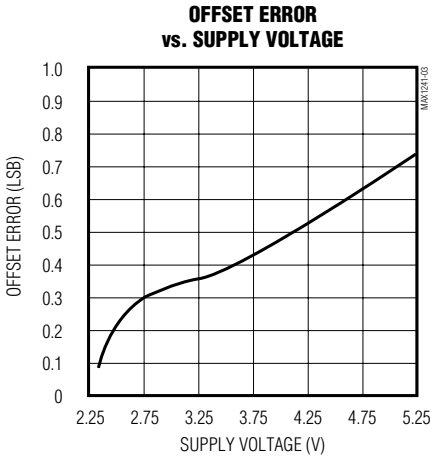

# +2.7V, Low-Power, 12-Bit Serial ADCs in 8-Pin SO

## Typical Operating Characteristics (continued)

($V_{DD}$ = 3.0V, $V_{REF}$ = 2.5V, $f_{SCLK}$ = 2.1MHz, $C_L$ = 20pF, $T_A$ = +25°C, unless otherwise noted.)

**SHUTDOWN SUPPLY CURRENT vs. SUPPLY VOLTAGE**

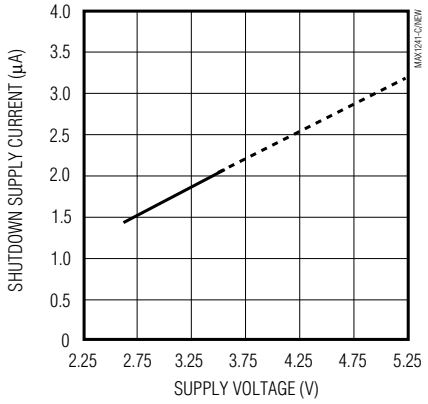


**SHUTDOWN SUPPLY CURRENT vs. TEMPERATURE**

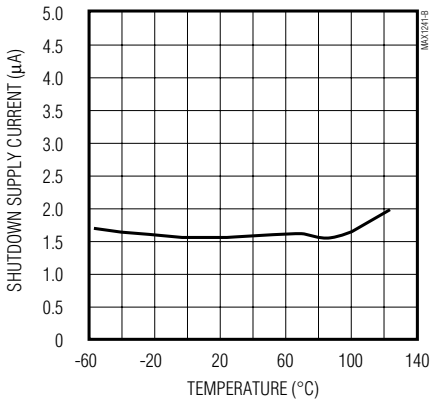


**OFFSET ERROR vs. TEMPERATURE**

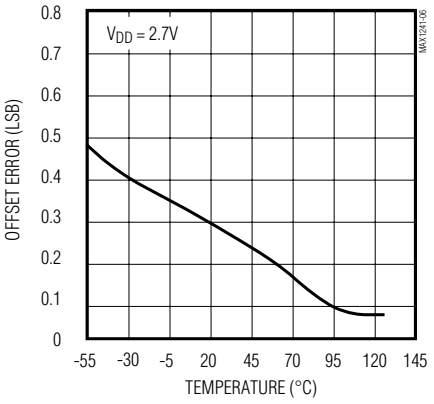


**GAIN ERROR vs. SUPPLY VOLTAGE**

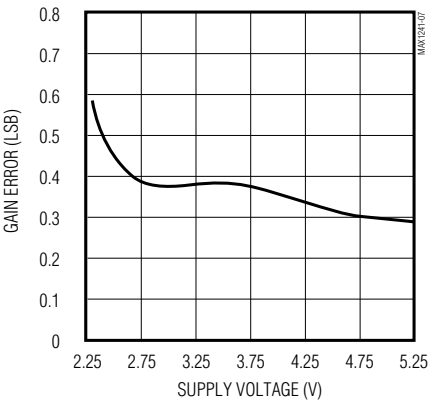


**GAIN ERROR vs. TEMPERATURE**

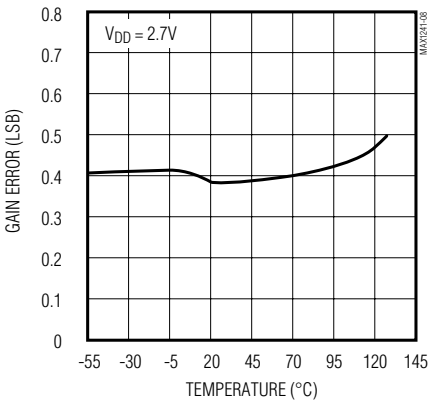


**MAX1240 INTERNAL REFERENCE VOLTAGE vs. SUPPLY VOLTAGE**

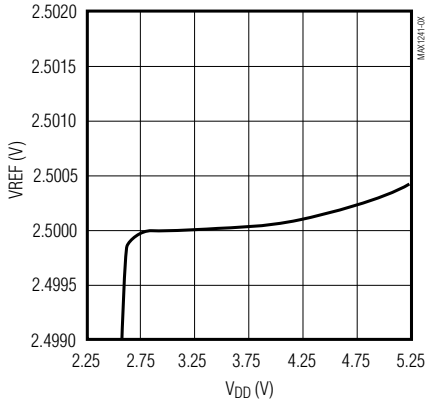


**MAX1240 INTERNAL REFERENCE VOLTAGE vs. TEMPERATURE**

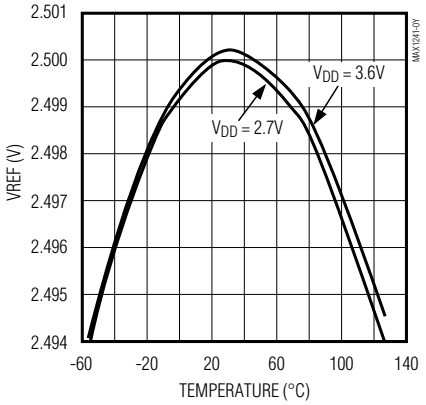


**INTEGRAL NONLINEARITY vs. SUPPLY VOLTAGE**

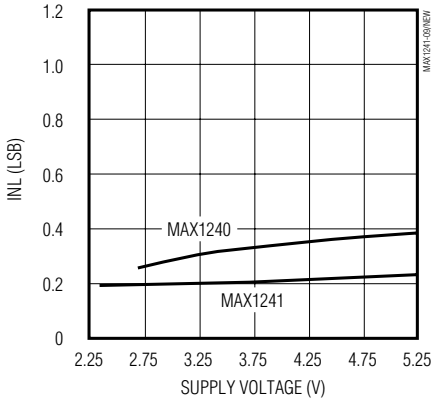


**INTEGRAL NONLINEARITY vs. TEMPERATURE**

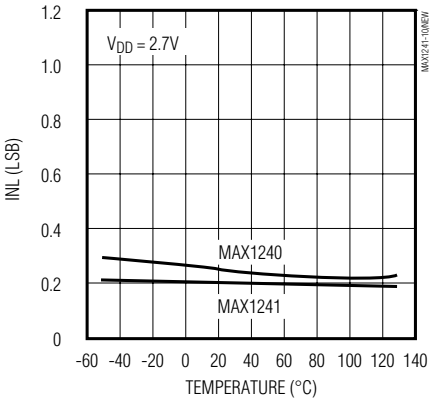

## Typical Operating Characteristics (continued)

($V_{DD}$ = 3.0V, REF = 2.5V, $f_{SCLK}$ = 2.1MHz, $C_L$ = 20pF, $T_A$ = +25°C, unless otherwise noted.)

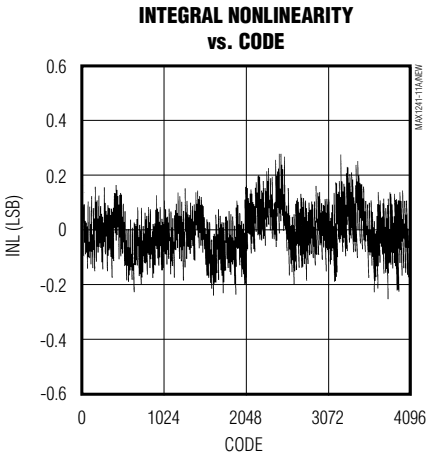


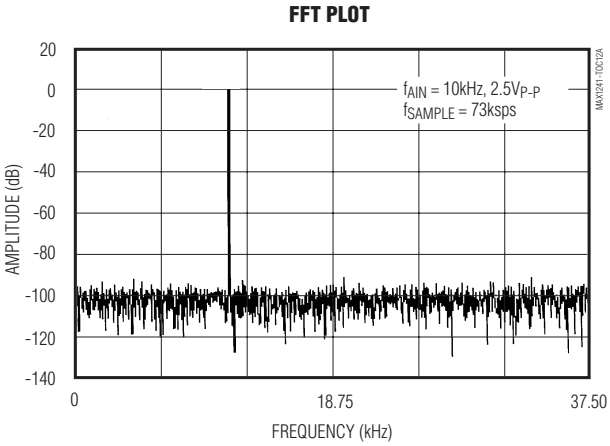


## Pin Description

| PIN | NAME | FUNCTION |
|---|---|---|
| 1 | $V_{DD}$ | Positive Supply Voltage: 2.7V to 3.6V, (MAX1240); 2.7V to 5.25V (MAX1241) |
| 2 | AIN | Sampling Analog Input, 0V to $V_{REF}$ range |
| 3 | $\overline{SHDN}$ | Three-Level Shutdown Input. Pulling $\overline{SHDN}$ low shuts the MAX1240/MAX1241 down to 15µA (max) supply current. Both the MAX1240 and MAX1241 are fully operational with either $\overline{SHDN}$ high or unconnected. For the MAX1240, pulling $\overline{SHDN}$ high enables the internal reference, and letting $\overline{SHDN}$ open disables the internal reference and allows for the use of an external reference. |
| 4 | REF | Reference Voltage for Analog-to-Digital Conversion. Internal 2.5V reference output for MAX1240; bypass with 4.7µF capacitor. External reference voltage input for MAX1241, or for MAX1240 with the internal reference disabled. Bypass REF with a minimum of 0.1µF when using an external reference. |
| 5 | GND | Analog and Digital Ground |
| 6 | DOUT | Serial Data Output. Data changes state at SCLK's falling edge. DOUT is high impedance when $\overline{CS}$ is high. |
| 7 | $\overline{CS}$ | Active-Low Chip Select initiates conversions on the falling edge. When $\overline{CS}$ is high, DOUT is high impedance. |
| 8 | SCLK | Serial Clock Input. SCLK clocks data out at rates up to 2.1MHz. |

# +2.7V, Low-Power, 12-Bit Serial ADCs in 8-Pin SO

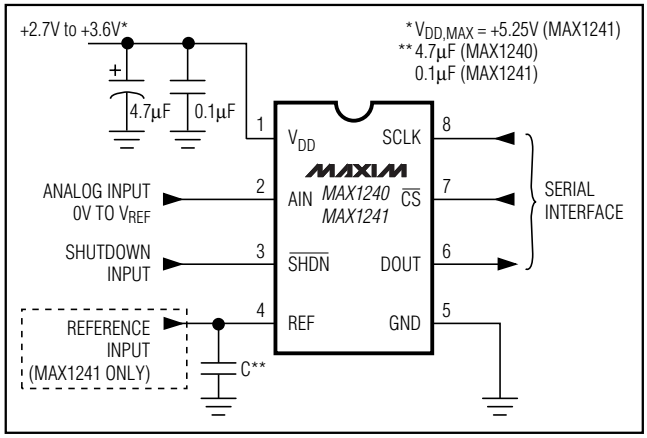


*Figure 3. Operational Diagram*

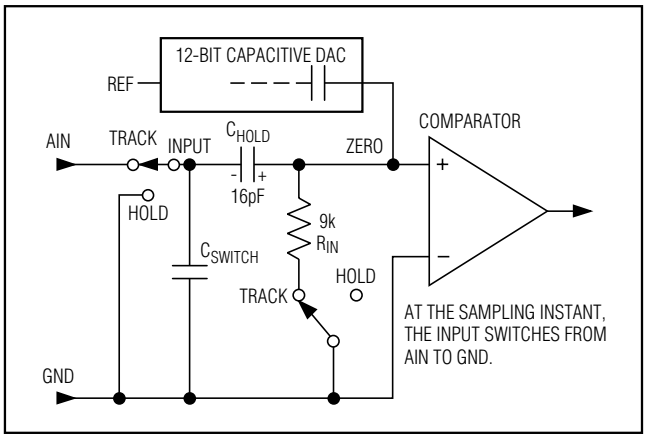


*Figure 4. Equivalent Input Circuit*

## Detailed Description

### Converter Operation

The MAX1240/MAX1241 use an input track/hold (T/H) and successive-approximation register (SAR) circuitry to convert an analog input signal to a digital 12-bit output. No external-hold capacitor is needed for the T/H. Figure 3 shows the MAX1240/MAX1241 in its simplest configuration. The MAX1240/MAX1241 convert input signals in the 0V to $V_{REF}$ range in 9µs, including T/H acquisition time. The MAX1240's internal reference is trimmed to 2.5V, while the MAX1241 requires an external reference. Both devices accept voltages from 1.0V to $V_{DD}$. The serial interface requires only three digital lines (SCLK, $\overline{CS}$, and DOUT) and provides an easy interface to microprocessors (µPs).

The MAX1240/MAX1241 have two modes: normal and shutdown. Pulling $\overline{SHDN}$ low shuts the device down and reduces supply current below 10µA ($V_{DD} \leq 3.6V$), while pulling $\overline{SHDN}$ high or leaving it open puts the device into operational mode. Pulling $\overline{CS}$ low initiates a conversion. The conversion result is available at DOUT in unipolar serial format. The serial data stream consists of a high bit, signaling the end of conversion (EOC), followed by the data bits (MSB first).

### Analog Input

Figure 4 illustrates the sampling architecture of the analog-to-digital converter's (ADC's) comparator. The full-scale input voltage is set by the voltage at REF.

#### Track/Hold

In track mode, the analog signal is acquired and stored in the internal hold capacitor. In hold mode, the T/H switch opens and maintains a constant input to the ADC's SAR section.

During acquisition, the analog input (AIN) charges capacitor $C_{HOLD}$. Bringing $\overline{CS}$ low ends the acquisition interval. At this instant, the T/H switches the input side of $C_{HOLD}$ to GND. The retained charge on $C_{HOLD}$ represents a sample of the input, unbalancing node ZERO at the comparator's input.

In hold mode, the capacitive digital-to-analog converter (DAC) adjusts during the remainder of the conversion cycle to restore node ZERO to 0V within the limits of 12-bit resolution. This action is equivalent to transferring a charge from $C_{HOLD}$ to the binary-weighted capacitive DAC, which in turn forms a digital representation of the analog input signal. At the conversion's end, the input side of $C_{HOLD}$ switches back to AIN, and $C_{HOLD}$ charges to the input signal again.

The time required for the T/H to acquire an input signal is a function of how quickly its input capacitance is charged. If the input signal's source impedance is high, the acquisition time lengthens and more time must be allowed between conversions. The acquisition time ($t_{ACQ}$) is the maximum time the device takes to acquire the signal, and is also the minimum time needed for the signal to be acquired. Acquisition time is calculated by:

$$t_{ACQ} = 9(R_S + R_{IN}) \times 16pF$$

where $R_{IN} = 9k\Omega$, $R_S$ = the input signal's source impedance, and $t_{ACQ}$ is never less than 1.5µs. Source impedances below 1kΩ do not significantly affect the ADC's AC performance.

Higher source impedances can be used if a 0.01µF capacitor is connected to the analog input. Note that the input capacitor forms an RC filter with the input source impedance, limiting the ADC's input signal bandwidth.

#### Input Bandwidth

The ADCs' input tracking circuitry has a 2.25MHz small-signal bandwidth, so it is possible to digitize high-speed transient events and measure periodic signals with bandwidths exceeding the ADC's sampling rate by using undersampling techniques. To avoid aliasing of unwanted high-frequency signals into the frequency band of interest, anti-alias filtering is recommended.

#### Analog Input Protection

Internal protection diodes, which clamp the analog input to $V_{DD}$ and GND, allow the input to swing from GND - 0.3V to $V_{DD}$ + 0.3V without damage. However, for accurate conversions near full scale, the input must not exceed $V_{DD}$ by more than 50mV, or be lower than GND by 50mV.

**If the analog input exceeds 50mV beyond the supplies, limit the input current to 2mA.**

#### Internal Reference (MAX1240)

The MAX1240 has an on-chip voltage reference trimmed to 2.5V. The internal reference output is connected to REF and also drives the internal capacitive DAC. The output can be used as a reference voltage source for other components and can source up to 400µA. Bypass REF with a 4.7µF capacitor. Larger capacitors increase wake-up time when exiting shutdown (see the section *Using $\overline{SHDN}$ to Reduce Supply Current*). The internal reference is enabled by pulling the $\overline{SHDN}$ pin high. Letting $\overline{SHDN}$ open disables the internal reference, which allows the use of an external reference, as described in the *External Reference* section.

#### External Reference

The MAX1240/MAX1241 operate with an external reference at the REF pin. To use the MAX1240 with an external reference, disable the internal reference by letting $\overline{SHDN}$ open. Stay within the +1.0V to $V_{DD}$ voltage range to achieve specified accuracy. The minimum input impedance is 18kΩ for DC currents. During conversion, the external reference must be able to deliver up to 250µA of DC load current and have an output impedance of 10Ω or less. The recommended minimum value for the bypass capacitor is 0.1µF. If the reference has higher output impedance or is noisy, bypass it close to the REF pin with a 4.7µF capacitor.

## Serial Interface

#### Initialization after Power-Up and Starting a Conversion

When power is first applied, and if $\overline{SHDN}$ is not pulled low, it takes the fully discharged 4.7µF reference bypass capacitor up to 20ms to provide adequate charge for specified accuracy. With an external reference, the internal reset time is 10µs after the power supplies have stabilized. No conversions should be performed during these times.

To start a conversion, pull $\overline{CS}$ low. At $\overline{CS}$'s falling edge, the T/H enters its hold mode and a conversion is initiated. After an internally timed conversion period, the end of conversion is signaled by DOUT pulling high. Data can then be shifted out serially with the external clock.

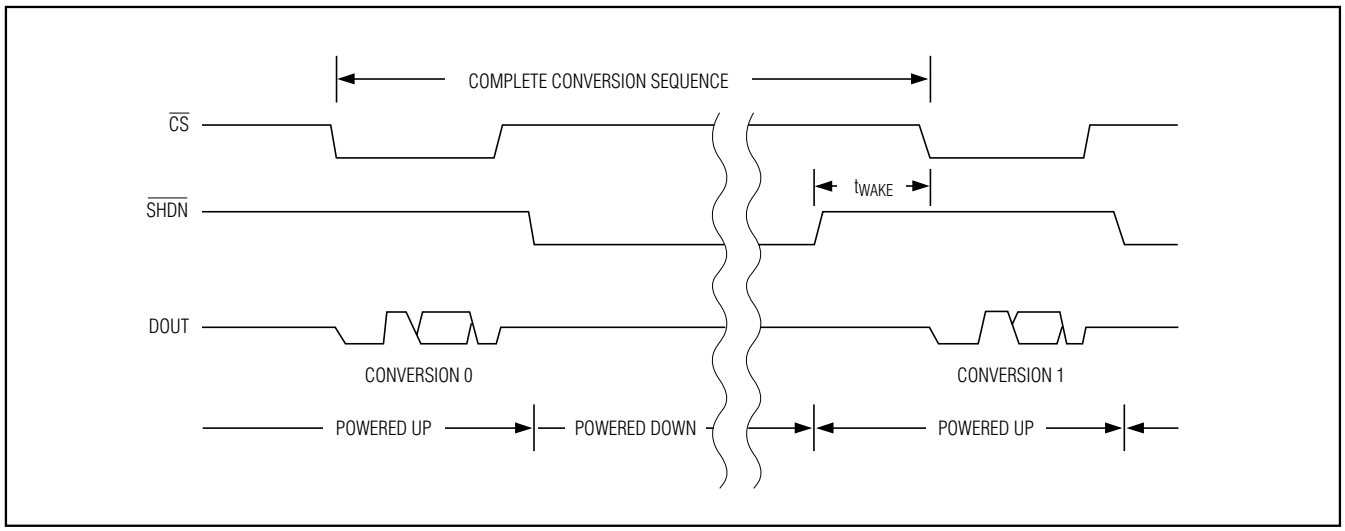


*Figure 5. Shutdown Sequence*

# +2.7V, Low-Power, 12-Bit Serial ADCs in 8-Pin SO

### Using $\overline{SHDN}$ to Reduce Supply Current

Power consumption can be reduced significantly by shutting down the MAX1240/MAX1241 between conversions. Figure 6 shows a plot of average supply current versus conversion rate. Because the MAX1241 uses an external reference voltage (assumed to be present continuously), it "wakes up" from shutdown more quickly (in 4µs) and therefore provides lower average supply currents. The wake-up time ($t_{WAKE}$) is the time from when $\overline{SHDN}$ is deasserted to the time when a conversion may be initiated (Figure 5). For the MAX1240, this time depends on the time in shutdown (Figure 7) because the external 4.7µF reference bypass capacitor loses charge slowly during shutdown.

### External Clock

The actual conversion does not require the external clock. This allows the conversion result to be read back at the µP's convenience at any clock rate from up to 2.1MHz. The clock duty cycle is unrestricted if each clock phase is at least 200ns. Do not run the clock while a conversion is in progress.

### Timing and Control

Conversion-start and data-read operations are controlled by the $\overline{CS}$ and SCLK digital inputs. The timing diagrams of Figures 8 and 9 outline serial-interface operation.

A $\overline{CS}$ falling edge initiates a conversion sequence: the T/H stage holds the input voltage, the ADC begins to convert, and DOUT changes from high impedance to logic low. SCLK must be kept low during the conversion. An internal register stores the data when the conversion is in progress.

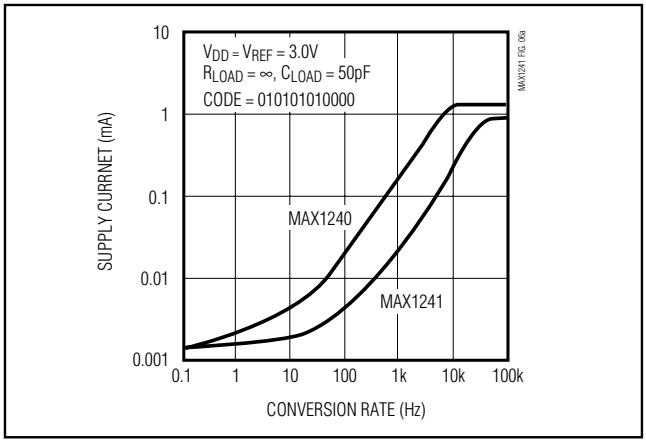


*Figure 6. Average Supply Current vs. Conversion Rate*

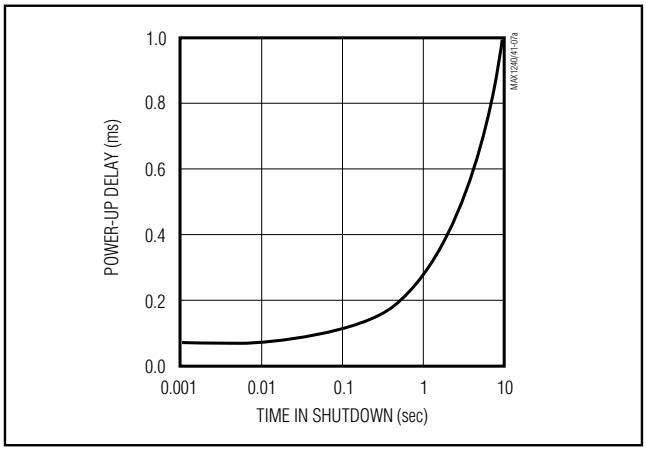


*Figure 7. Typical Reference Power-Up Delay vs. Time in Shutdown*

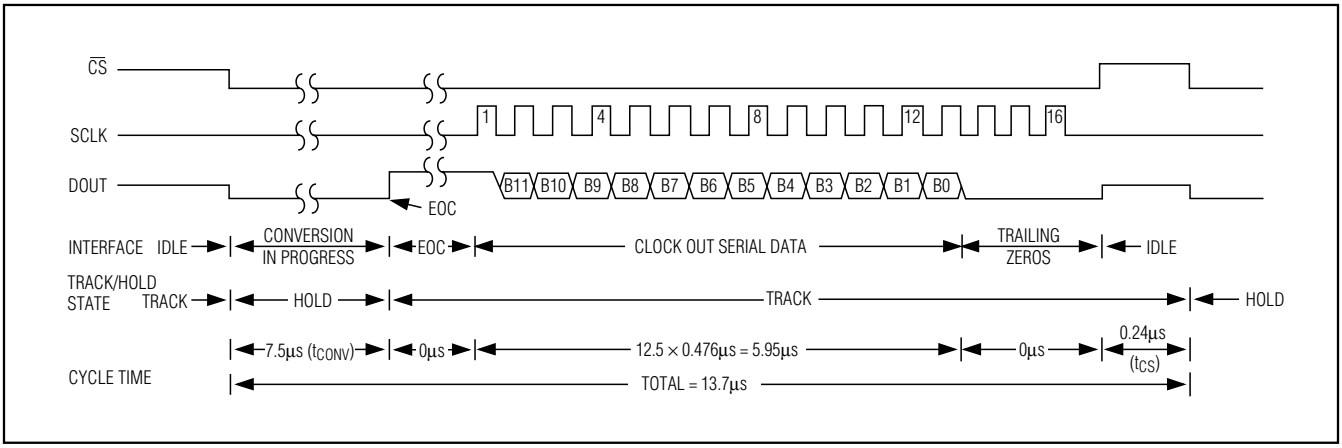


*Figure 8. Interface Timing Sequence*

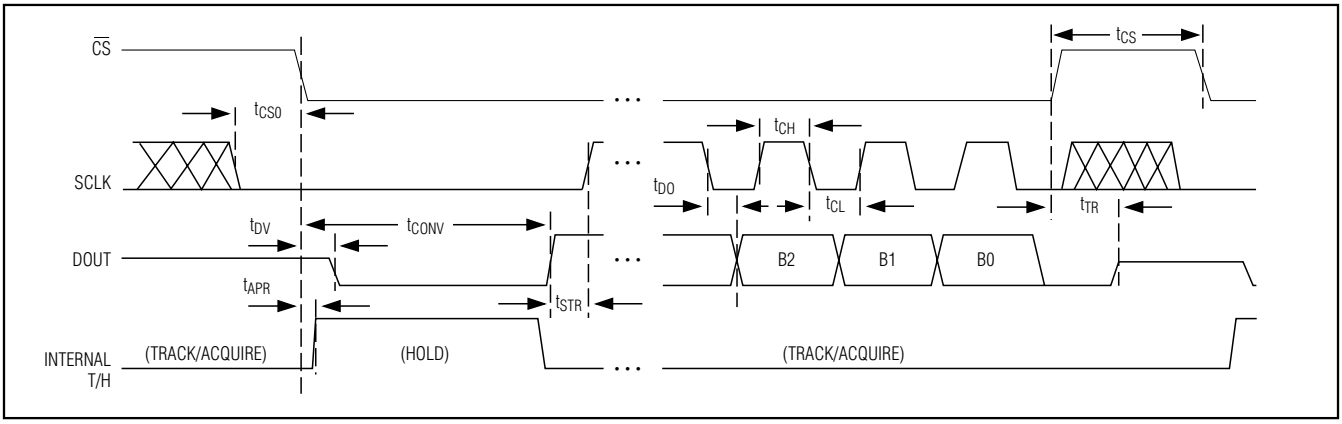


*Figure 9. Detailed Serial-Interface Timing*

End of conversion (EOC) is signaled by DOUT going high. DOUT's rising edge can be used as a framing signal. SCLK shifts the data out of this register any time after the conversion is complete. DOUT transitions on SCLK's falling edge. The next falling clock edge produces the MSB of the conversion at DOUT, followed by the remaining bits. Since there are 12 data bits and one leading high bit, at least 13 falling clock edges are needed to shift out these bits. Extra clock pulses occurring after the conversion result has been clocked out, and prior to a rising edge of $\overline{CS}$, produce trailing zeros at DOUT and have no effect on converter operation.

Minimum cycle time is accomplished by using DOUT's rising edge as the EOC signal. Clock out the data with 12.5 clock cycles at full speed. Pull $\overline{CS}$ high after reading the conversion's LSB. After the specified minimum time ($t_{CS}$), $\overline{CS}$ can be pulled low again to initiate the next conversion.

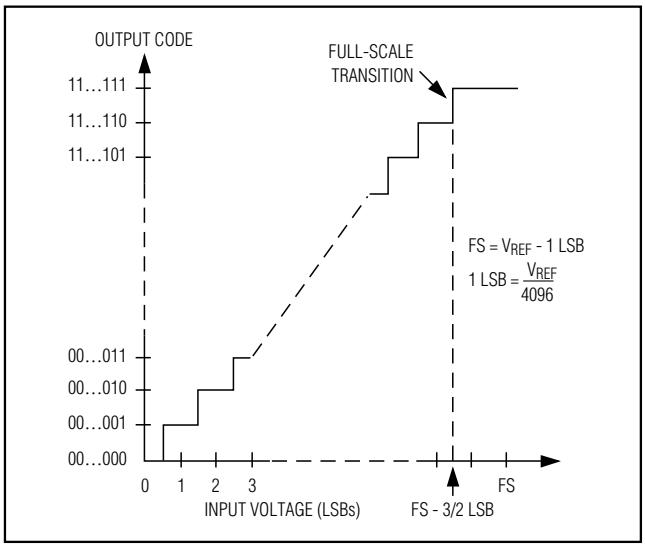


*Figure 10. Unipolar Transfer Function, Full Scale (FS) = $V_{REF}$ - 1 LSB, Zero Scale (ZS) = GND*

### Output Coding and Transfer Function

The data output from the MAX1240/MAX1241 is binary, and Figure 10 depicts the nominal transfer function. Code transitions occur halfway between successive-integer LSB values. If $V_{REF}$ = +2.500V, then 1 LSB = 610µV or 2.500V/4096.

## Applications Information

### Connection to Standard Interfaces

The MAX1240/MAX1241 serial interface is fully compatible with SPI/QSPI and MICROWIRE standard serial interfaces (Figure 11).

If a serial interface is available, set the CPU's serial interface in master mode so the CPU generates the serial clock. Choose a clock frequency up to 2.1MHz.

1) Use a general-purpose I/O line on the CPU to pull $\overline{CS}$ low. Keep SCLK low.
2) Wait the for the maximum conversion time specified before activating SCLK. Alternatively, look for a DOUT rising edge to determine the end of conversion.
3) Activate SCLK for a minimum of 13 clock cycles. The first falling clock edge produces the MSB of the DOUT conversion. DOUT output data transitions on SCLK's falling edge and is available in MSB-first format. Observe the SCLK to DOUT valid timing characteristic. Data can be clocked into the µP on SCLK's rising edge.
4) Pull $\overline{CS}$ high at or after the 13th falling clock edge. If $\overline{CS}$ remains low, trailing zeros are clocked out after the LSB.

# +2.7V, Low-Power, 12-Bit Serial ADCs in 8-Pin SO

5) With $\overline{CS}$ = high, wait the minimum specified time, $t_{CS}$, before initiating a new conversion by pulling $\overline{CS}$ low. If a conversion is aborted by pulling $\overline{CS}$ high before the conversion's end, wait for the minimum acquisition time, $t_{ACQ}$, before starting a new conversion.

$\overline{CS}$ must be held low until all data bits are clocked out. Data can be output in two bytes or continuously, as shown in Figure 8. The bytes contain the result of the conversion padded with one leading 1, and trailing 0s.

### SPI and MICROWIRE

When using SPI or MICROWIRE, set CPOL = 0 and CPHA = 0. Conversion begins with a $\overline{CS}$ falling edge. DOUT goes low, indicating a conversion in progress. Wait until DOUT goes high or until the maximum specified 7.5µs conversion time elapses. Two consecutive 1-byte reads are required to get the full 12 bits from the ADC. DOUT output data transitions on SCLK's falling edge and is clocked into the µP on SCLK's rising edge.

The first byte contains a leading 1, and seven bits of conversion result. The second byte contains the remaining five bits and three trailing zeros. See Figure 11 for connections and Figure 12 for timing.

### QSPI

Set CPOL = CPHA = 0. Unlike SPI, which requires two 1-byte reads to acquire the 12 bits of data from the ADC, QSPI allows the minimum number of clock cycles necessary to clock in the data. The MAX1240/MAX1241 requires 13 clock cycles from the µP to clock out the 12 bits of data with no trailing zeros (Figure 13). The maximum clock frequency to ensure compatibility with QSPI is 2.097MHz.

### Layout, Grounding, and Bypassing

For best performance, use printed circuit boards. Wire-wrap boards are not recommended. Board layout should ensure that digital and analog signal lines are separated from each other. Do not run analog and digital (especially clock) lines parallel to one another, or digital lines underneath the ADC package.

Figure 14 shows the recommended system ground connections. Establish a single-point analog ground ("star" ground point) at GND, separate from the logic ground. Connect all other analog grounds and DGND to this star ground point for further noise reduction. No other digital system ground should be connected to this single-point analog ground. The ground return to the power supply for this ground should be low impedance and as short as possible for noise-free operation.

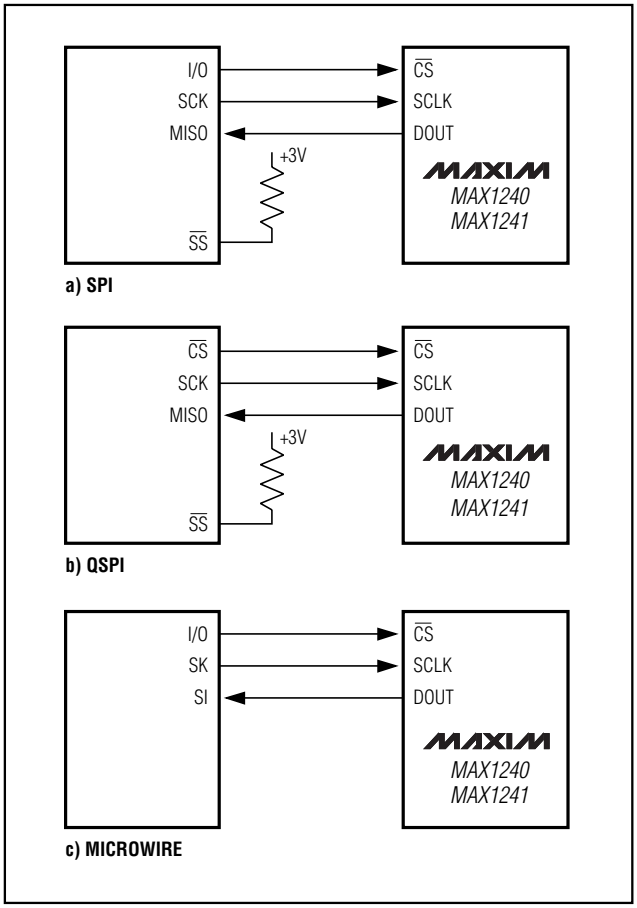


*Figure 11. Common Serial-Interface Connections to the MAX1241*

High-frequency noise in the $V_{DD}$ power supply may affect the ADC's high-speed comparator. Bypass this supply to the single-point analog ground with 0.1µF and 4.7µF bypass capacitors. Minimize capacitor lead lengths for best supply-noise rejection. If the power supply is very noisy, a 10Ω resistor can be connected as a lowpass filter to attenuate supply noise (Figure 14).

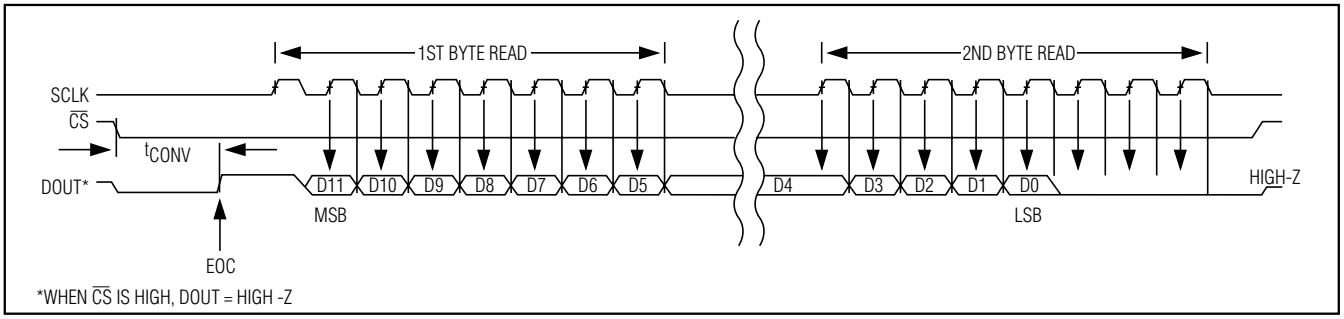


*Figure 12. SPI/MICROWIRE Serial Interface Timing (CPOL = CPHA = 0)*

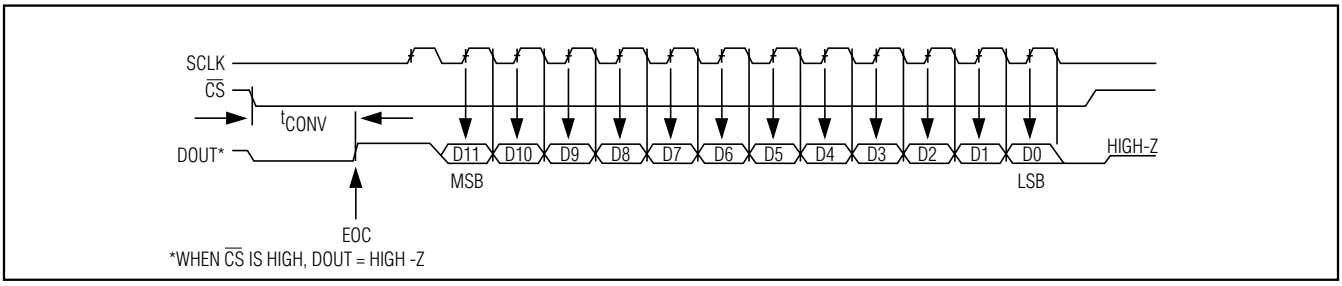


*Figure 13. QSPI Serial Interface Timing (CPOL = CPHA = 0)*

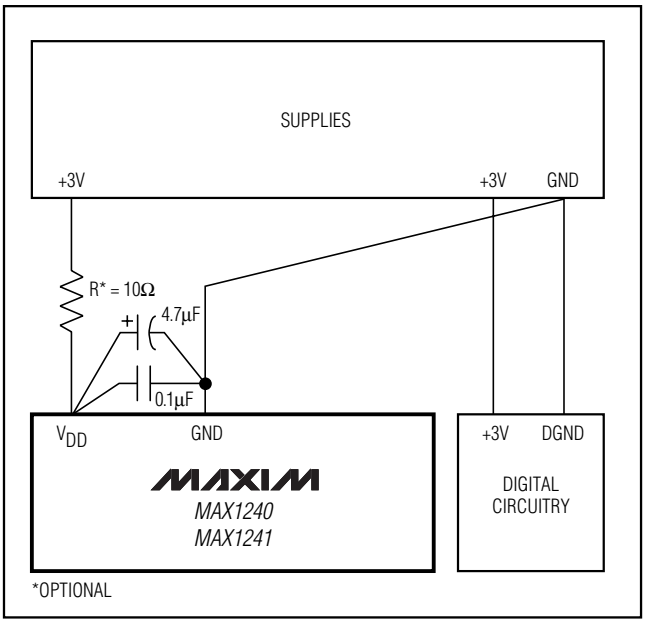


*Figure 14. Power-Supply Grounding Condition*

# +2.7V, Low-Power, 12-Bit Serial ADCs in 8-Pin SO

## Ordering Information (continued)

| PART | TEMP RANGE | PIN-PACKAGE | INL (LSB) |
|---|---|---|---|
| MAX1240AEPA+ | -40°C to +85°C | 8 PDIP | ±1/2 |
| MAX1240BEPA+ | -40°C to +85°C | 8 PDIP | ±1 |
| MAX1240CEPA+ | -40°C to +85°C | 8 PDIP | ±1 |
| MAX1240AESA+ | -40°C to +85°C | 8 SO | ±1/2 |
| MAX1240BESA+ | -40°C to +85°C | 8 SO | ±1 |
| MAX1240CESA+ | -40°C to +85°C | 8 SO | ±1 |
| MAX1240AMJA+ | -55°C to +125°C | 8 CERDIP† | ±1/2 |
| MAX1240BMJA+ | -55°C to +125°C | 8 CERDIP† | ±1 |
| MAX1240CMJA+ | -55°C to +125°C | 8 CERDIP† | ±1 |
| **MAX1241**ACPA+ | 0°C to +70°C | 8 PDIP | ±1/2 |
| MAX1241BCPA+ | 0°C to +70°C | 8 PDIP | ±1 |
| MAX1241CCPA+ | 0°C to +70°C | 8 PDIP | ±1 |
| MAX1241ACSA+ | 0°C to +70°C | 8 SO | ±1/2 |
| MAX1241BCSA + | 0°C to +70°C | 8 SO | ±1 |
| MAX1241CCSA+ | 0°C to +70°C | 8 SO | ±1 |
| MAX1241BC/D | 0°C to +70°C | Dice* | ±1 |
| MAX1241AEPA+ | -40°C to +85°C | 8 PDIP | ±1/2 |
| MAX1241BEPA+ | -40°C to +85°C | 8 PDIP | ±1 |
| MAX1241CEPA+ | -40°C to +85°C | 8 PDIP | ±1 |
| MAX1241AESA+ | -40°C to +85°C | 8 SO | ±1/2 |
| MAX1241BESA+ | -40°C to +85°C | 8 SO | ±1 |
| MAX1241CESA+ | -40°C to +85°C | 8 SO | ±1 |
| MAX1241AMJA+ | -55°C to +125°C | 8 CERDIP† | ±1/2 |
| MAX1241BMJA+ | -55°C to +125°C | 8 CERDIP† | ±1 |
| MAX1241CMJA+ | -55°C to +125°C | 8 CERDIP† | ±1 |

*+Denotes lead(Pb)-free/RoHS-compliant package.*
**Dice are specified at $T_A$ = +25°C, DC parameters only.*
*†Contact factory for availability and processing to MIL-STD-883.*

## Chip Information

PROCESS: BiCMOS
SUBSTRATE CONNECTED TO GND

## Package Information

For the latest package outline information and land patterns, go to **www.maxim-ic.com/packages**. Note that a "+", "#", or "-" in the package code indicates RoHS status only. Package drawings may show a different suffix character, but the drawing pertains to the package regardless of RoHS status.

| PACKAGE TYPE | PACKAGE CODE | OUTLINE NO. | LAND PATTERN NO. |
|---|---|---|---|
| 8 PDIP | P8+2 | 21-0043 | — |
| 8 SO | S8+5 | 21-0041 | 90-0096 |
| 8 CERDIP | J8+2 | 21-0045 | — |

## Revision History

| REVISION NUMBER | REVISION DATE | DESCRIPTION | PAGES CHANGED |
|---|---|---|---|
| 3 | 3/10 | Added automotive grade to data sheet | 1, 2, 3, 7, 9, 14, 15, 16 |
| 4 | 6/10 | Future product note removed from one part in the *Ordering Information* | 1 |
| 5 | 8/10 | Removed MAX1240BC/D and add MAX1240CC/D | 1 |

*Maxim cannot assume responsibility for use of any circuitry other than circuitry entirely embodied in a Maxim product. No circuit patent licenses are implied. Maxim reserves the right to change the circuitry and specifications without notice at any time.*



© 2010 Maxim Integrated Products Maxim is a registered trademark of Maxim Integrated Products, Inc.