# Glass Passivated Bridge Rectifiers

Comchip
SMD Diode Specialist

# GBPC15005W-G Thru. GBPC5010W-G Series

## Reverse Voltage: 50 to 1000V
## Forward Current: 15/25/35/50A
## RoHS Device

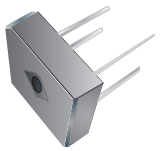

## Features

-Surge overload -300~450 Amperes peak.

-Low forward voltage drop.

-Electrically isolated base -2000 Volts.

-Materials used carries UL recognition.

-UL recognized file # E349301

## Mechanical Data

-Polarity: As marked on Body.

-Mounting position: Any.

-Weight: 11.92 grams (approx.).

**GBPC-W**

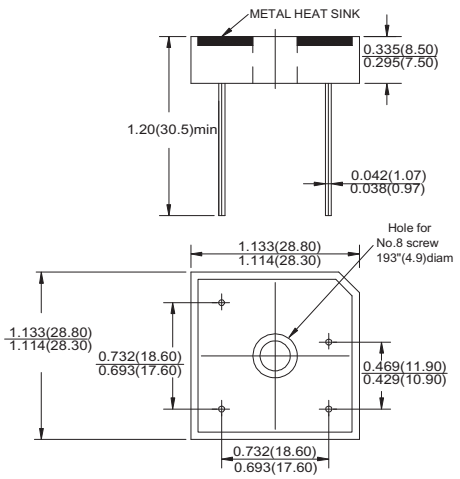


Dimensions in inches and (millimeter)

## Maximum ratings and electrical characteristics

Rating at 25°C ambient temperature unless otherwise specified.
Single phase, half wave ,60Hz, resistive or inductive load.
For capacitive load, derate current by 20%

| Parameter | Symbol | GBPC_W-G | GBPC_W-G | GBPC_W-G | GBPC_W-G | GBPC_W-G | GBPC_W-G | GBPC_W-G | Unit |
|---|---|---|---|---|---|---|---|---|---|
| | | 15005 | 1501 | 1502 | 1504 | 1506 | 1508 | 1510 | |
| | | 25005 | 2501 | 2502 | 2504 | 2506 | 2508 | 2510 | |
| | | 35005 | 3501 | 3502 | 3504 | 3506 | 3508 | 3510 | |
| | | 50005 | 5001 | 5002 | 5004 | 5006 | 5008 | 5010 | |
| Maximum Recurrent Peak Reverse Voltage | $V_{RRM}$ | 50 | 100 | 200 | 400 | 600 | 800 | 1000 | V |
| Maximum RMS Bridge Input Voltage | $V_{RMS}$ | 35 | 70 | 140 | 280 | 420 | 560 | 700 | V |
| Maximum DC Blocking Voltage | $V_{DC}$ | 50 | 100 | 200 | 400 | 600 | 800 | 1000 | V |

| Parameter | Symbol | GBPC15W | GBPC25W | GBPC35W | GBPC50W | Unit |
|---|---|---|---|---|---|---|
| Maximum Average Forward Rectified Output Current @Tc=55°C | $I_{(AV)}$ | 15 | 25 | 35 | 50 | A |
| Peak Forward Surge Current , 8.3ms Single Half Sine-Wave Super Imposed On Rated Load | $I_{FSM}$ | 300 | 350 | 400 | 450 | A |
| Maximum Forward Voltage Drop Per Element at 7.5/12.5/17.5/25.0A Peak | $V_F$ | 1.1 | | | | V |
| Maximum Reverse Current at rated DC Blocking Voltage Per Element @ $T_J$=25°C | $I_R$ | 10.0 | | | | μA |
| Operating Temperature Range | $T_J$ | -55 to +150 | | | | °C |
| Storage Temperature Range | $T_{STG}$ | -55 to +150 | | | | °C |

Company reserves the right to improve product design , functions and reliability without notice.

Rating and Characteristics Curves (GBPC10005W-G Thru. GBPC5010W-G Series)

Fig.1 - Maximum Forward Surge Current

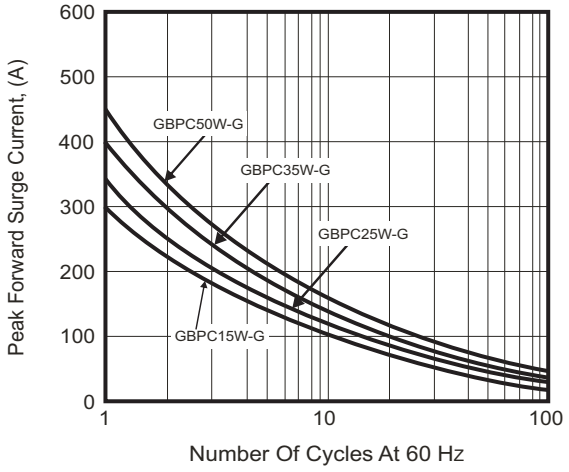


Fig.2 - Dearting Current Output Rectified Current

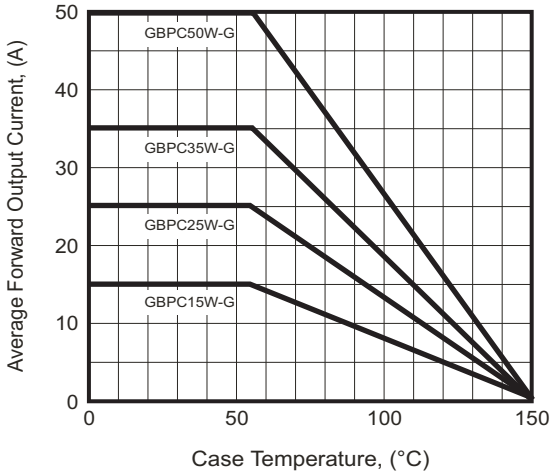


Fig.3 - Typical Forward Characteristics

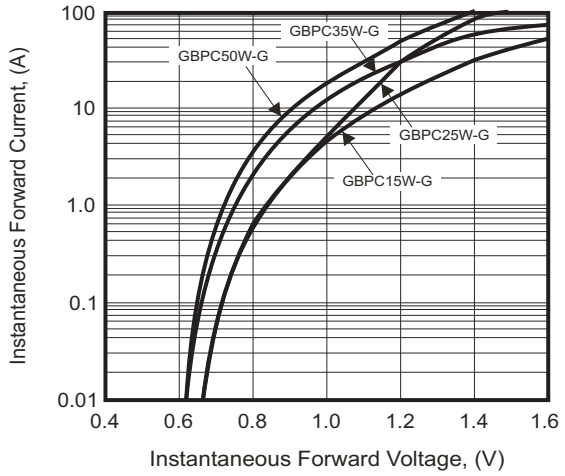


Fig.4 - Typical Reverse Characteristics

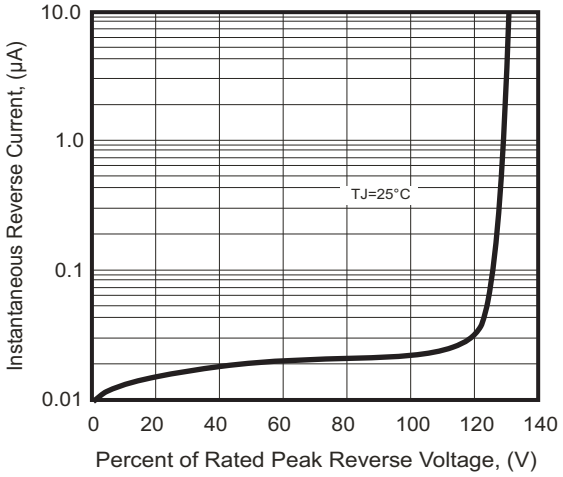

## Marking Code

| Part Number | Marking code |
|---|---|
| GBPC15005W-G<br>GBPC25005W-G<br>GBPC35005W-G<br>GBPC50005W-G | GBPC15005W<br>GBPC25005W<br>GBPC35005W<br>GBPC50005W |
| GBPC1501W-G<br>GBPC2501W-G<br>GBPC3501W-G<br>GBPC5001W-G | GBPC1501W<br>GBPC2501W<br>GBPC3501W<br>GBPC5001W |
| GBPC1502W-G<br>GBPC2502W-G<br>GBPC3502W-G<br>GBPC5002W-G | GBPC1502W<br>GBPC2502W<br>GBPC3502W<br>GBPC5002W |
| GBPC1504W-G<br>GBPC2504W-G<br>GBPC3504W-G<br>GBPC5004W-G | GBPC1504W<br>GBPC2504W<br>GBPC3504W<br>GBPC5004W |
| GBPC1506W-G<br>GBPC2506W-G<br>GBPC3506W-G<br>GBPC5006W-G | GBPC1506W<br>GBPC2506W<br>GBPC3506W<br>GBPC5006W |
| GBPC1508W-G<br>GBPC2508W-G<br>GBPC3508W-G<br>GBPC5008W-G | GBPC1508W<br>GBPC2508W<br>GBPC3508W<br>GBPC5008W |
| GBPC1510W-G<br>GBPC2510W-G<br>GBPC3510W-G<br>GBPC5010W-G | GBPC1510W<br>GBPC2510W<br>GBPC3510W<br>GBPC5010W |

**XXXXX / XXXX = Product type marking code**

**⊂ = Comchip Logo**

## Standard Packaging

| Case Type | TRAY PACK | |
|---|---|---|
| | TRAY ( pcs ) | CARTON ( pcs ) |
| GBPC-W | 100 | 500 |