CRS SMD Shunt Resistor

Avaliable in two sizes ARCOL's CRS utilises Electron Beam Welding technology to connect its Manganin or NiCr element to heavy copper connectors. Suitable for typical applications such as Solar Inverters, Frequency converters & current sensors for hybrid power sources.

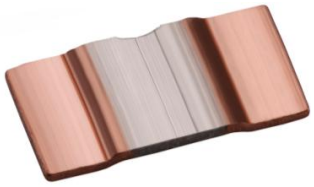

- Excellent long-term stability and low inductance
- Suitable for mounting using re-flow soldering or welding on copper
- Power rating upto 7 Watts

Characteristics

Tolerance (Code):	± 1% (F), ± 5% (J)
Operating temperature:	-55°C to +170°C
Overload:	5 times rated power for 5 seconds
Thermal shock:	±0.1%. -65°C,25°C,125°C,25°C, 25 cycles
Load life:	±1%. 90min. "ON", 30min "OFF" for 2000 hours
Moisture resistance:	±0.2% 90~98%RH, +25°C, +65°C, -10°C, 10 cycles.
Resistance to Soldering Heat:	±0.2% 350°C for 30 seconds or 250°C for 10min.
High Temperture Exposure:	±0.2% 140°C for 250 hours
Vibration, High frequency:	±0.2% 15g 10~2000Hz, 36 cycles
Inductance	<3nH

Dimensions (mm)

Size	Value	Material	Thickness (t)
CRS1050	0.5mΩ	Manganin	0.88mm±0.1
CRS1050	1mΩ	Manganin	0.43mm±0.1
CRS1050	2mΩ	NiCr alloy	0.64mm±0.1
CRS1050	3mΩ	NiCr alloy	0.43mm±0.1
CRS1050	4mΩ	NiCr alloy	0.32mm±0.1
CRS1575	0.2mΩ	Manganin	1.50mm±0.1
CRS1575	0.5.mΩ	Manganin	0.56mm±0.1
CRS1575	1mΩ	NiCr alloy	0.90mm±0.1
CRS1575	2mΩ	NiCr alloy	0.45mm±0.1
CRS1575	3mΩ	NiCr alloy	0.30mm±0.1

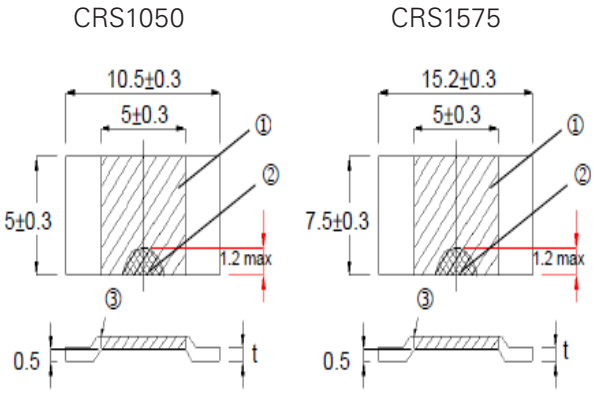

1	Resistance material	2	Trimming Area	3	Electron Beam Welding

ARCOL UK Limited,
Threemilestone Ind. Estate,
Truro, Cornwall, TR4 9LG, UK.
T +44 (0) 1872 277431
F +44 (0) 1872 222002
E sales@arcolresistors.com

www.arcolresistors.com

The information contained herein does not form part of a contract and is subject to change without notice. ARCOL operate a policy of continual product development, therefore, specifications may change.

It is the responsibility of the customer to ensure that the component selected from our range is suitable for the intended application. If in doubt please ask ARCOL.

CRS SMD Shunt Resistor

Electrical Specifications

Type	Wattage (Rated Power)	Resistance Range		TCR (PPM/°C) (+20°C~+150°C)
		F(±1%)	J(±5%)	
CRS1050	5	R0005 (0.5mΩ)		±75
CRS1050	4	R001 (1mΩ)		±60
CRS1050	4	R002 (2mΩ)		±100
CRS1050	3	R003 (3mΩ)		±100
CRS1050	2.5	R004 (4mΩ)		±100
CRS1575	7	R0002 (0.2mΩ)		±50
CRS1575	6	R0005 (0.5mΩ)		±100
CRS1575	6	R001 (1mΩ)		±120
CRS1575	4	R002 (2mΩ)		±120
CRS1575	3.5	R003 (3mΩ)		±120

Derating Curve

CRS1050

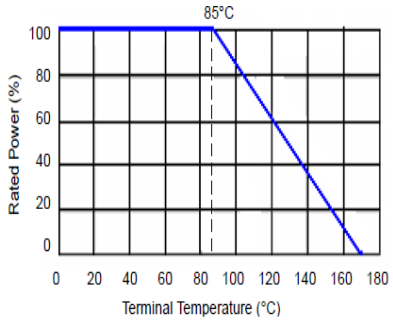

CRS1575

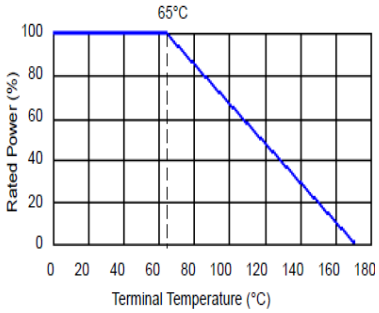

Ordering Procedure

Standard Resistor: Series, Resistance Value, Tolerance,TCR,Packaging (TR: Tape & Reel, B: Bulk)

e.g: CRS1050 R001 J 60ppm TR

Packaging

Emboss Plastic Tape Specifications

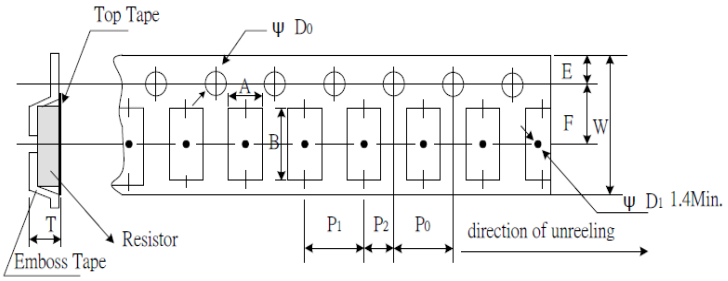

Type	A	B	W	E	F	P0	P1	P2	ØD0	T	Quanitity (EA)
CRS1050	5.7	11.2	16	1.75	7.5	4	12	6	1.50	1.2	3000
CRS1575	8.2	16.1	24	1.75	11.5	4	12	6	1.50	1.9	2000

ARCOL UK Limited,
Threemilestone Ind. Estate,
Truro, Cornwall, TR4 9LG, UK.
T +44 (0) 1872 277431
F +44 (0) 1872 222002
E sales@arcolresistors.com

www.arcolresistors.com

The information contained herein does not form part of a contract and is subject to change without notice. ARCOL operate a policy of continual product development, therefore, specifications may change.

It is the responsibility of the customer to ensure that the component selected from our range is suitable for the intended application. If in doubt please ask ARCOL.