THIS DRAWING IS UNPUBLISHED. RELEASED FOR PUBLICATION -,- .
© COPYRIGHT - By - ALL RIGHTS RESERVED.

LOC	DIST
AD	00

REVISIONS

P	LTR	DESCRIPTION	DATE	DWN	APVD
	P	REVISED PER ECO-11-005033	25MAR11	RK	HMR

1. HOUSING MATERIAL: LIQUID CRYSTAL POLYMER
   COLOR: NATURAL.
2. CONTACT MATERIAL: PHOSPHOR-BRONZE.
3. CONTACT FINISH:
   UNDERPLATE (ENTIRE CONTACT) -
   0.00127 MIN NICKEL PER SAE-AMS-QQ-N-290.
   ON MATING SURFACES-
   CONFORMS TO ALL TESTING SPECIFIED FOR TELCORDIA
   UNCONTROLLED ENVIRONMENT
   ON LEADS-
   0.00381 MIN TIN PER ASTM B 545, OVER UNDERPLATE
   LUBRICATION (MIN MATING SURFACES)
   SURFACE CONDITIONER PER AMP SPEC. 112-1002 AFTER PLATING.
4. PART MARKING, LOCATED APPROXIMATELY AS SHOWN.
5. OBSOLETE PARTS: OBSOLETE CIS STREAMLINING PER D.RENAUD/D.SINISI

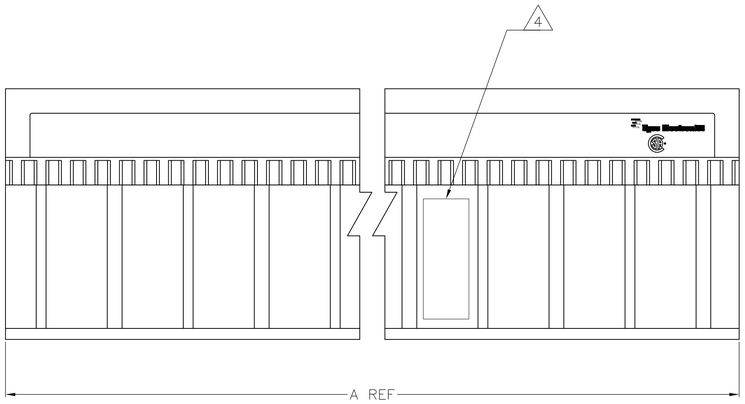

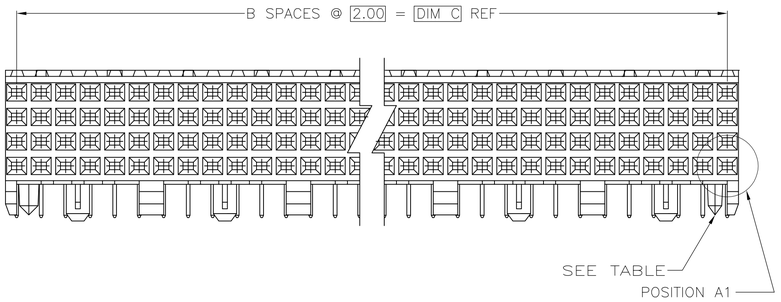

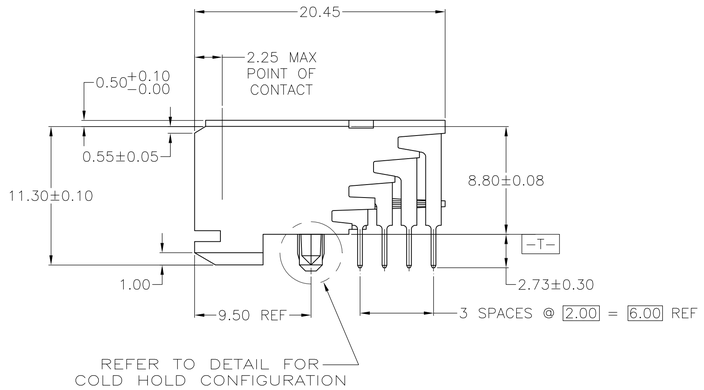

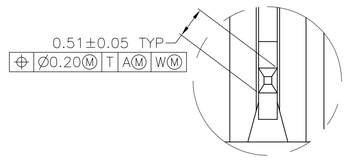

DETAIL Z
SCALE 20:1

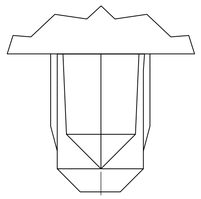

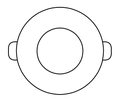

TYPICAL COLD HOLD
FOR ALL ASSEMBLIES

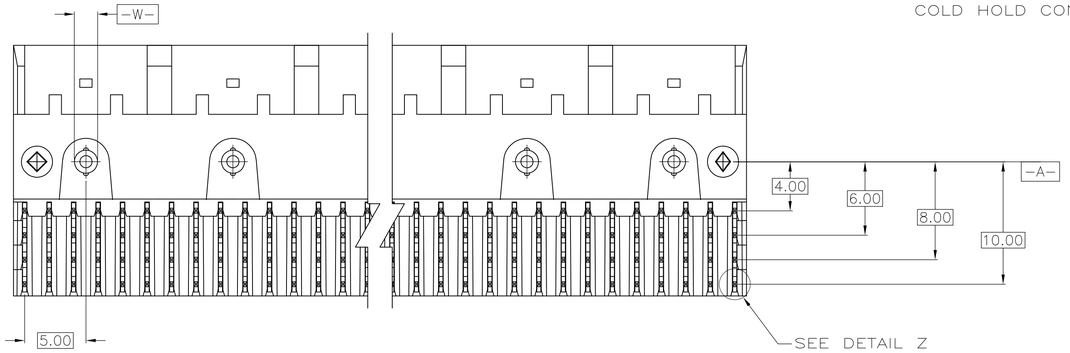

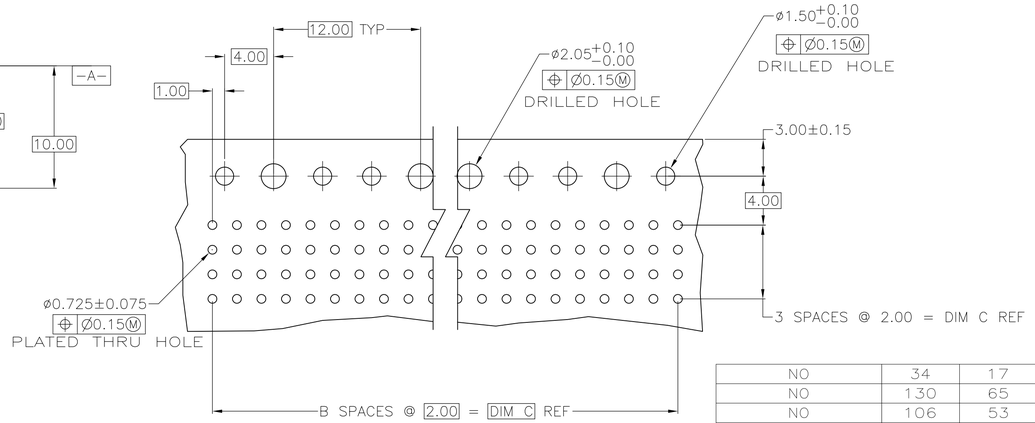

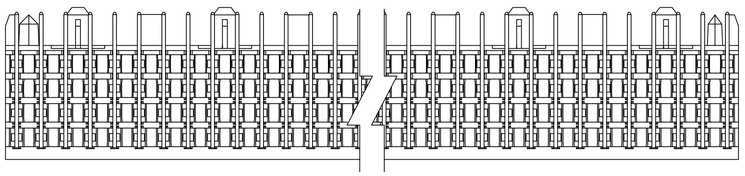

RECOMMENDED CIRCUIT PATTERN
PER IPC-D300 TYPE II, CLASS C
(COMPONENT SIDE)

POSITIONING PEGS	C	B	A	FINISH	NO OF POSN	PART NUMBER
NO	34	17	35.88	3	72	1-5536507-1
NO	130	65	131.88	3	264	5 ~~1-5536507-0~~
NO	106	53	107.88	3	216	5 ~~5536507-9~~
NO	118	59	119.88	3	240	5 ~~5536507-8~~
NO	70	35	71.88	3	144	5536507-7
NO	58	29	59.88	3	120	5536507-6
NO	82	41	83.88	3	168	5536507-5
NO	94	47	95.88	3	192	5536507-4
NO	46	23	47.88	3	96	5536507-3
NO	22	11	23.88	3	48	5536507-2
YES	10	5	11.88	3	24	5536507-1

THIS DRAWING IS A CONTROLLED DOCUMENT.

DIMENSIONS: mm

TOLERANCES UNLESS OTHERWISE SPECIFIED:
0 PLC ± -
1 PLC ± -
2 PLC ± .13
3 PLC ± -
4 PLC ± -
ANGLES ± -

MATERIAL 1 2
FINISH 3

DWN R. MCMASTER 30AUG04
CHK R. WERTZ 30AUG04
APVD R. WERTZ 30AUG04
PRODUCT SPEC —
APPLICATION SPEC —
WEIGHT —

TE Connectivity

NAME RECEPTACLE ASSEMBLY, SIGNAL MODULE, Z-PACK, 2mm FB, 4 ROW, 2.73mm LEAD LENGTH

SIZE	CAGE CODE	DRAWING NO	RESTRICTED TO
A1	00779	C-5536507	—

CUSTOMER DRAWING SCALE 4:1 SHEET 1 OF 1 REV P

4805 (3/11)