CUI INC®

SERIES: SWM6-N | **DESCRIPTION:** AC-DC POWER SUPPLY

FEATURES

- up to 6 W power
- UL60601 4th edition
- compact vertical or horizontal mount
- universal input (90~264 Vac)
- single regulated output from 5~12 Vdc
- over voltage and short circuit protections
- DOE Level VI efficiency
- 2 MOPP compliant

MODEL	output voltage (Vdc)	output current max (A)	output power max (W)	ripple and noise[1] max (mVp-p)	efficiency level
SWM6-5-N	5	1.2	6	100	VI
SWM6-6-N	6	1	6	120	VI
SWM6-9-N	9	0.66	6	180	VI
SWM6-12-N	12	0.5	6	240	VI

Notes: 1. At full load, 100 ~ 240 Vac input, 20 MHz bandwidth oscilloscope, output terminated with a low ESR 47 µF electrolytic and 0.1 µF multilayer capacitor.

PART NUMBER KEY

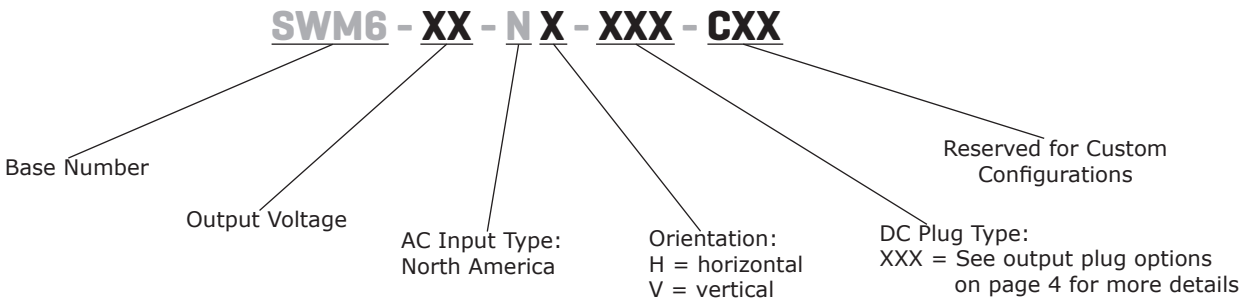

INPUT

parameter	conditions/description	min	typ	max	units
voltage		90		264	Vac
frequency		47		63	Hz
current	at 115 Vac, full load at 230 Vac, full load			0.6 0.3	A A
inrush current	at 115 Vac, full load, cold start at 230 Vac, full load, cold start			30 60	A A
leakage current	at 240 Vac, 50 Hz			0.1	mA
no load power consumption	at 115/230 Vac, 60/50 Hz			0.1	W

OUTPUT

parameter	conditions/description	min	typ	max	units
line regulation			±1		%
load regulation			±5		%
start-up time	at 100 Vac, to 90% of rated output voltage			3	s
rise time	at nominal input voltage, full load, from 10% to 90% of output voltage			50	ms
hold-up time	at nominal input voltage, full load	8.3			ms

PROTECTIONS

parameter	conditions/description	min	typ	max	units
over voltage protection	output shutdown, auto recovery				
over current protection	output shutdown, auto recovery			200	%
short circuit protection	output shut down, auto recovery				

SAFETY & COMPLIANCE

parameter	conditions/description	min	typ	max	units
isolation voltage	input to output		4,000		Vac
isolation resistance	input to output at 500 Vdc for 3 seconds	50			MΩ
safety approvals	medical: UL/cUL 60601 ITE: PSE				
EMI/EMC	FCC Part 15B Class B				
MTBF	as per MIL-HDBK-217F	100,000			hours
RoHS	2011/65/EU				

ENVIRONMENTAL

parameter	conditions/description	min	typ	max	units
operating temperature		0		40	°C
storage temperature		-20		85	°C
operating humidity	non-condensing	10		90	%
storage humidity	non-condensing	5		90	%
altitude			5,000		m

MECHANICAL

parameter	conditions/description	min	typ	max	units
dimensions	horizontal models: 55 x 25 x 43 vertical models: 53 x 41 x 30				mm mm
inlet plug	North America, 2-pin				
weight	horizontal models vertical models		65 70		g g
color	black				

MECHANICAL DRAWINGS

units: mm
tolerance: ±1 mm

Horizontal Models

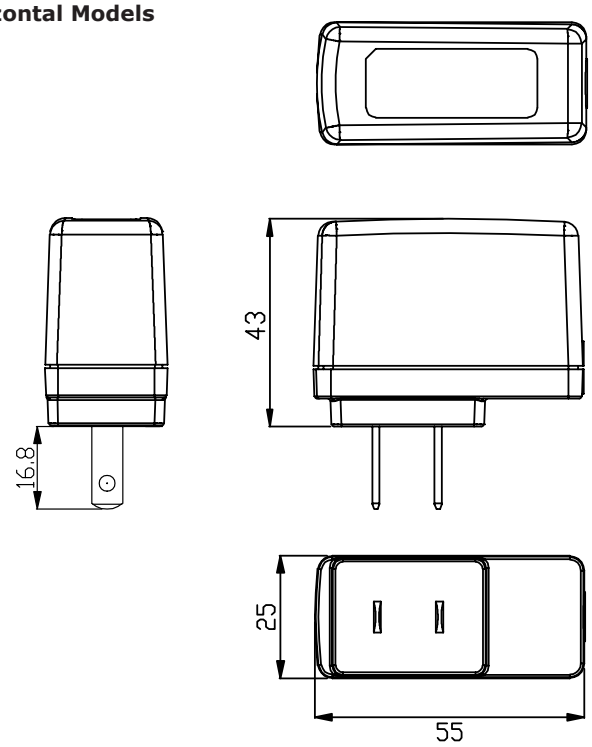

Vertical Models

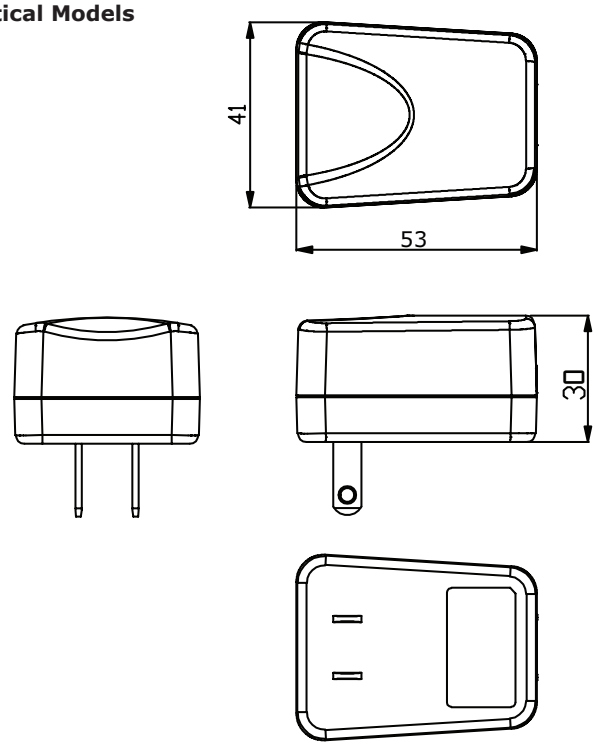

DC CORD

units: mm

Table 1

MODEL NO.	CABLE	CORD LENGTH
SWM6-5-N	UL2468, 22 AWG	1,500 mm ±50
SWM6-6-N	UL2468, 22 AWG	1,500 mm ±50
SWM6-9-N	UL2468, 24 AWG	1,500 mm ±50
SWM6-12-N	UL2468, 24 AWG	1,500 mm ±50

DC PLUG TYPE PART NUMBER KEY

X X X

Plug Polarity:
P = Center Positive

N = Center Negative

Plug Code:
X = Choose a code from the options below

Plug Angle:
"blank" = Straight
R = Right Angle

Plug Polarity		Code		Dimensions (mm)			Plug Angle	
Center Pos.	Center Neg.	Option	Type	A	B	C	Straight	Right
•	•	5	Standard	5.5	2.1	9.5	•	•
•	•	6	Standard	5.5	2.5	9.5	•	•
•	•	7	Standard	3.5	1.35	9.5	•	•
•	•	8	Standard	3.8	1.35	9.5	•	•
•	•	9	Standard	3.8	1.05	9.5	•	•
•	•	12	EIAJ-1	2.35	0.7	9.5	•	•
•	•	13	EIAJ-2	4.0	1.7	9.5	•	•
•	•	14	EIAJ-3	4.75	1.7	9.5	•	•
N/A	N/A	ST	Stripped & Tinned				N/A	N/A
N/A	N/A	MUB	USB	Micro USB Type B			•	N/A

Note: 1. Contact CUI for additional plug options

Standard

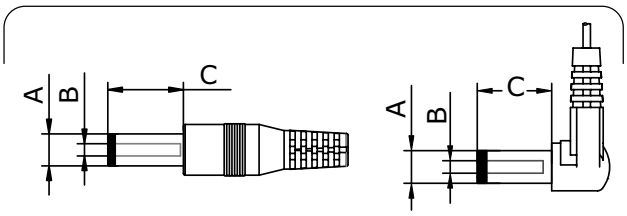

Straight Right Angle (R)

EIAJ

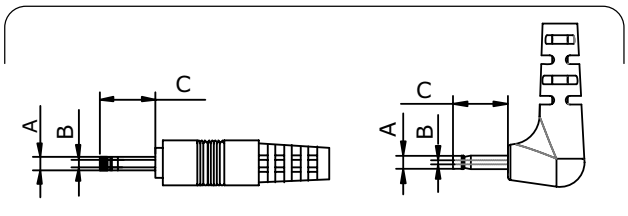

Straight Right Angle (R)

Stripped & Tinned

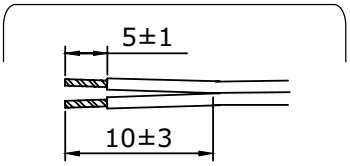

USB

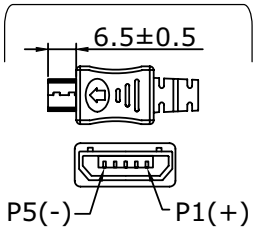

REVISION HISTORY

rev.	description	date
1.0	initial release	06/27/2017
1.01	added PSE certification	01/24/2018

The revision history provided is for informational purposes only and is believed to be accurate.

Headquarters
20050 SW 112th Ave.
Tualatin, OR 97062
800.275.4899

Fax 503.612.2383
cui.com
techsupport@cui.com

This device complies with part 15 of the FCC Rules. Operation is subject to the following two conditions:
(1) This device may not cause harmful interference, and
(2) this device must accept any interference received, including interference that may cause undesired operation.

CUI offers a one (1) year limited warranty. Complete warranty information is listed on our website.

CUI reserves the right to make changes to the product at any time without notice. Information provided by CUI is believed to be accurate and reliable. However, no responsibility is assumed by CUI for its use, nor for any infringements of patents or other rights of third parties which may result from its use.

CUI products are not authorized or warranted for use as critical components in equipment that requires an extremely high level of reliability. A critical component is any component of a life support device or system whose failure to perform can be reasonably expected to cause the failure of the life support device or system, or to affect its safety or effectiveness.