THIS DRAWING IS UNPUBLISHED. RELEASED FOR PUBLICATION 2011
© COPYRIGHT 2011 BY - ALL RIGHTS RESERVED.

LOC	DIST
1	-

REVISIONS

P	LTR	DESCRIPTION	DATE	DWN	APVD
	2	UPDATED	02MAY2011	AB	GT
	3	UPDATED	22JUL2013	MZ	JC
	4	REVISED LATCH SHAPE	02AUG2013	KR	JC
	A	PARTS RELEASED FOR PRODUCTION	13NOV2013	MZ	JC

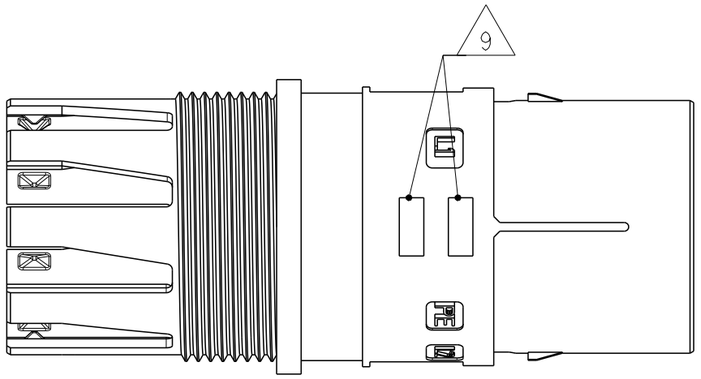

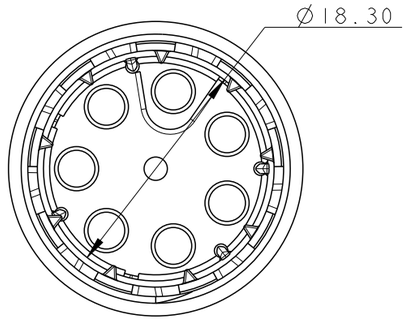

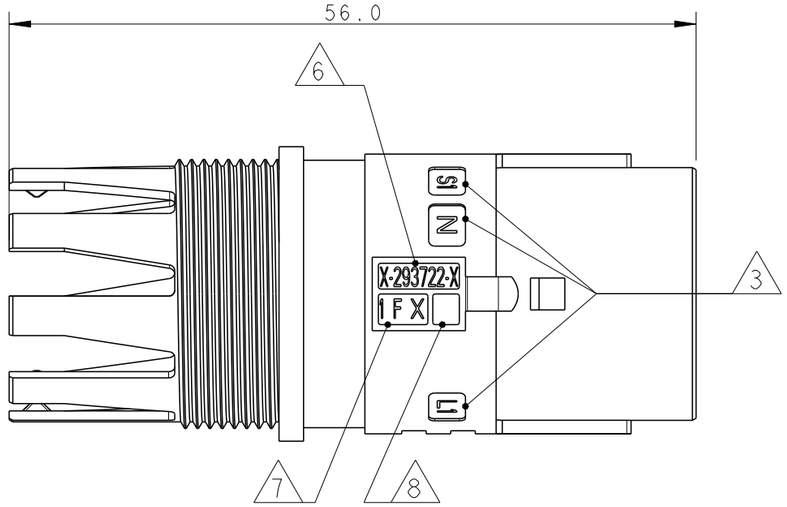

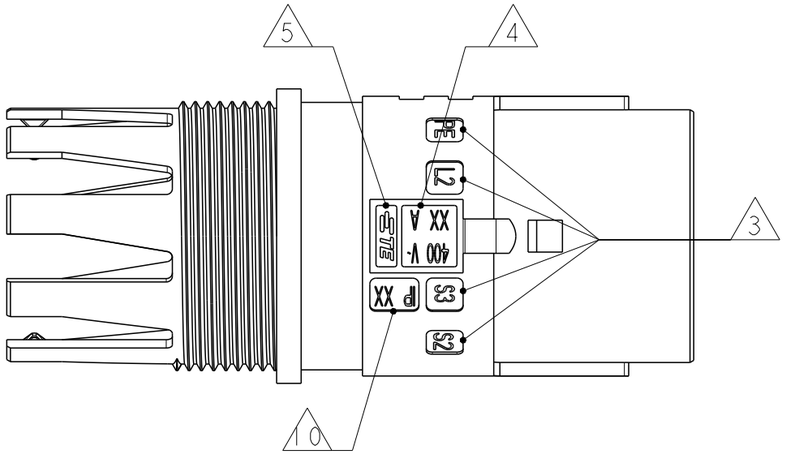

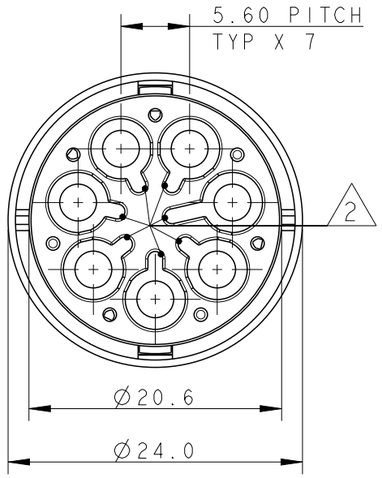

NOTES:

1. MATERIAL: PA GF (NATURAL AND BLACK COLOUR)
2. ALL POLARIZATION KEYS SHOWN FOR REF ONLY
3. WAYS I.D.
4. VOLTAGE AND CURRENT RATINGS
5. TE LOGO
6. TE PART NUMBER
7. DATA CODE AND CAVITY I.D.
8. AREA FOR AGENCIES APPROVAL LOGO
9. VISUAL INDICATOR FOR PE CONDUCTOR
10. IP CODE

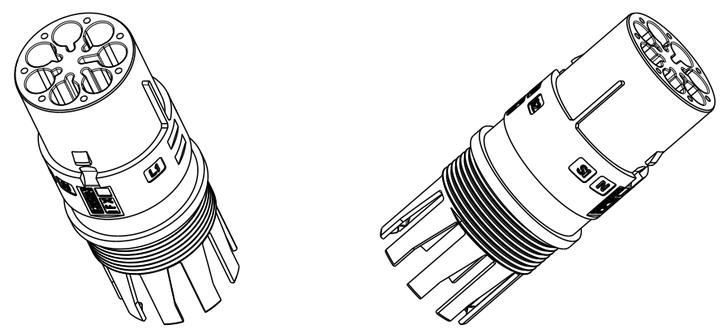

SCALE 1:1

THIS DRAWING IS A CONTROLLED DOCUMENT.

DIMENSIONS: mm

TOLERANCES UNLESS OTHERWISE SPECIFIED:

0 PLC	±-
1 PLC	±0.3
2 PLC	±0.20
3 PLC	±-
4 PLC	±-
ANGLES	±3°

MATERIAL NOTE 1

FINISH -

DWN A. BERNARDI 31MAR2011
CHK M. ZUCCA 31MAR2011
APVD G. TURCO 31MAR2011

PRODUCT SPEC -

APPLICATION SPEC -

WEIGHT -

Customer Drawing

TE Connectivity

NAME PIN HSG 7 POLES FREE HANGING NECTOR M-LINE UNSEALED VERSION

SIZE	CAGE CODE	DRAWING NO	RESTRICTED TO
A3	00779	C-293722	-

SCALE 2:1 SHEET 1 OF 2 REV A

1470-19 (3/11)

THIS DRAWING IS UNPUBLISHED. RELEASED FOR PUBLICATION 2011
© COPYRIGHT 2011 BY - ALL RIGHTS RESERVED.

LOC	DIST
1	-

REVISIONS

P	LTR	DESCRIPTION	DATE	DWN	APVD
	-	SEE SHEET 1	-	-	-

POLARIZATION TYPES

POLARIZATION TYPE "A"	POLARIZATION TYPE "B"	POLARIZATION TYPE "C"
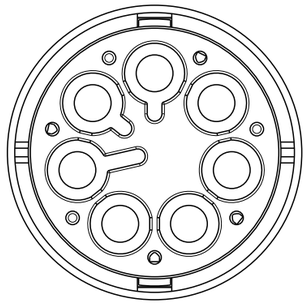	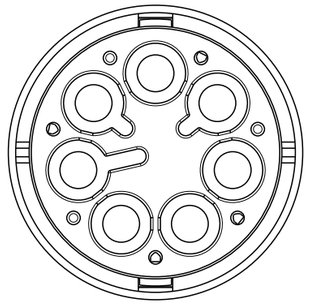	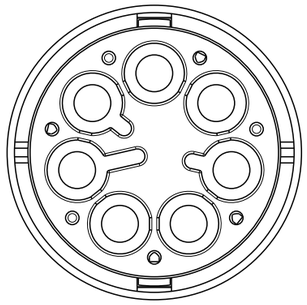
PNs 0-293722-1 AND 1-293722-1	PNs 0-293722-2 AND 1-293722-2	PNs 0-293722-3 AND 1-293722-3
POLARIZATION TYPE "D"	POLARIZATION TYPE "E"	
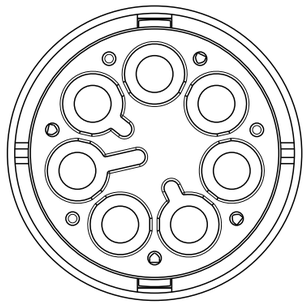	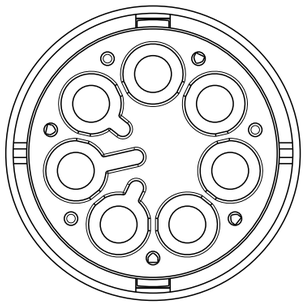	
PNs 0-293722-4 AND 1-293722-4	PNs 0-293722-5 AND 1-293722-5	

TABLE 1

NOTE	POL. KEYING	COLOUR	DESCRIPTION	REV.	P/N
1	E	BLACK	PIN HSG 7 POLES FREE HANGING NECTOR* M-LINE	A	1-293722-5
1	D	BLACK	PIN HSG 7 POLES FREE HANGING NECTOR* M-LINE	A	1-293722-4
1	C	BLACK	PIN HSG 7 POLES FREE HANGING NECTOR* M-LINE	A	1-293722-3
1	B	BLACK	PIN HSG 7 POLES FREE HANGING NECTOR* M-LINE	A	1-293722-2
1	A	BLACK	PIN HSG 7 POLES FREE HANGING NECTOR* M-LINE	A	1-293722-1
1	E	NATURAL	PIN HSG 7 POLES FREE HANGING NECTOR* M-LINE	A	0-293722-5
1	D	NATURAL	PIN HSG 7 POLES FREE HANGING NECTOR* M-LINE	A	0-293722-4
1	C	NATURAL	PIN HSG 7 POLES FREE HANGING NECTOR* M-LINE	A	0-293722-3
1	B	NATURAL	PIN HSG 7 POLES FREE HANGING NECTOR* M-LINE	A	0-293722-2
1	A	NATURAL	PIN HSG 7 POLES FREE HANGING NECTOR* M-LINE	A	0-293722-1

THIS DRAWING IS A CONTROLLED DOCUMENT.

DIMENSIONS: mm

TOLERANCES UNLESS OTHERWISE SPECIFIED:

0 PLC	±-
1 PLC	±0.3
2 PLC	±0.20
3 PLC	±-
4 PLC	±-
ANGLES	±3°

MATERIAL NOTE 1

FINISH -

DWN	A. BERNARDI	31MAR2011
CHK	M. ZUCCA	31MAR2011
APVD	G. TURCO	31MAR2011

PRODUCT SPEC -

APPLICATION SPEC -

WEIGHT -

TE Connectivity

NAME PIN HSG 7 POLES FREE HANGING NECTOR M-LINE UNSEALED VERSION

SIZE	CAGE CODE	DRAWING NO	RESTRICTED TO
A3	00779	C-293722	-

Customer Drawing | SCALE 2:1 | SHEET 2 OF 2 | REV A