THIS DRAWING IS UNPUBLISHED.
VERTRAULICHE UNVEROEFFENTLICHTE ZEICHNUNG
© COPYRIGHT 1997 BY AMP INCORPORATED
RELEASED FOR PUBLICATION
FREI FUER VEROEFFENTLICHUNG – , 1997.
ALL RIGHTS RESERVED.
ALLE RECHTE VORBEHALTEN

MASTED WITH:
PASSEND ZU:
Bg8

LOC	DIST
A1	—

PROJECT NR:

REVISIONS
AENDERUNGEN

P	LTR	DESCRIPTION BESCHREIBUNG	DATE	DWN	APVD
	B20	Pos. added ECR-08-022214	03.09.08	SR	SM
	B21	REVISED PER ECO-11-006333	28MAR11	HMR	MM

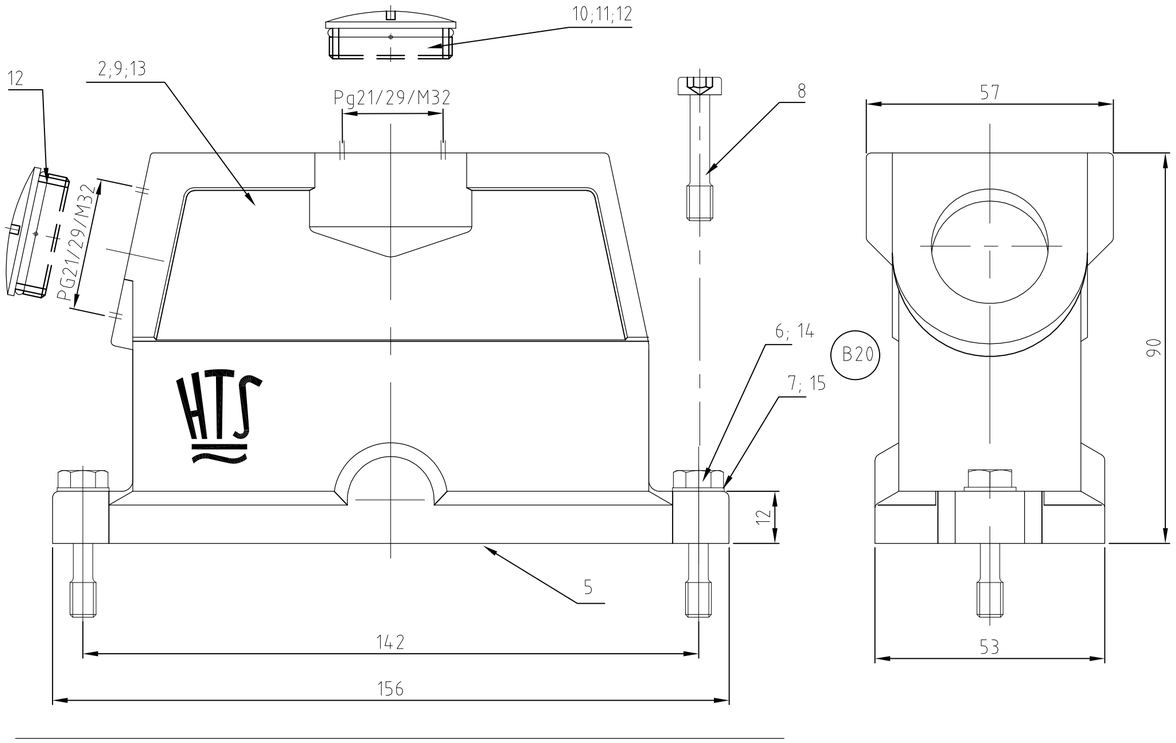

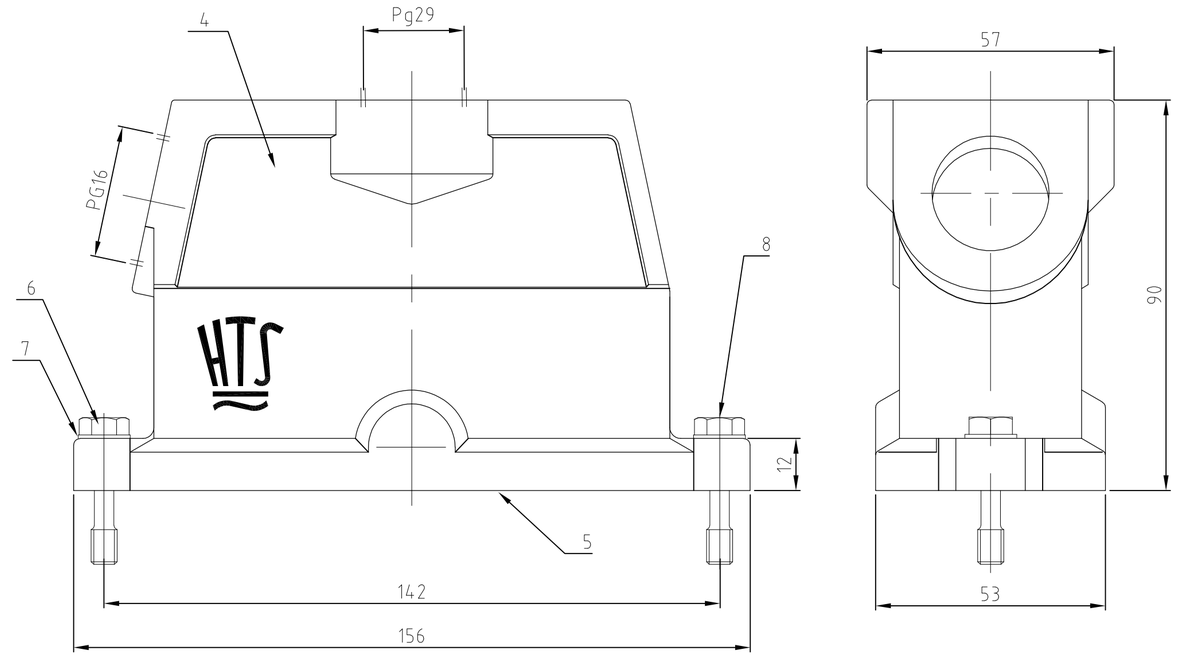

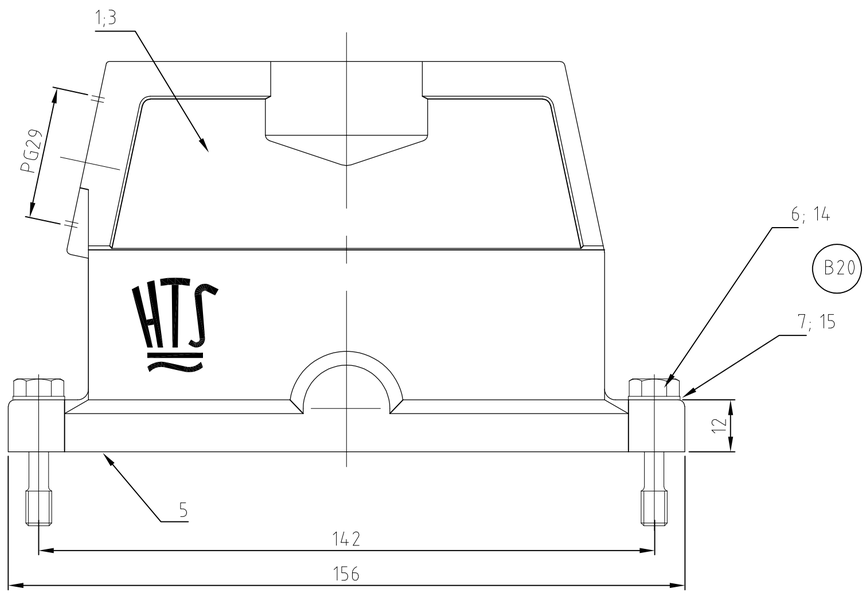

OBSOLETE

2	2	2	2	2	2	2									Scheibe/Pane	V4A/stainl. steel	blank/blank		15	
2	2	2	2	2	2	2									Allen screw	V4A/stainl. steel	blank/blank		14	M6x30
1	1						1	1							Steckergehäuse EMV/hood	Aluminium/Alu		unvarnished	13	spot face 1.5mm
						1		2	1						Blindstopfen Pg29/blanking piece	Plastic	natur		12	(PN 0-4 und 0-7 als STS) / (PN 0-5 als STO+STS)
						1			1	1					O-Ring Pg29	Neoprene		black/schwarz	11	
						1			1	1					Blindstopfen Pg29/blanking piece	MS/brass	vernickelt/nickel plated	blau/blue	10	for STO
									1	1				1	Plug housing EMV/hood	Aluminium/Alu		white aluminum	9	STO.1.29+STS.1.29
									2						Allen screw	V2A/stainl. steel	blank/blank		8	
							2	2	2	2	2	2	2	2	Scheibe/Pane	V2A/stainl. steel	blank/blank		7	
							2	2		2	2	2	2	2	Allen screw	V2A/stainl. steel	blank/blank		6	M6x30
1	1	1	1	1	1	1	1	1	1	1	1	1	1	1	Dichtung/seal	Neoprene		black/schwarz	5	conductive
											1				Plug housing EMV/hood	Aluminium/Alu		grey/grau	4	
				1	1	1						1			Plug housing EMV/hood	Aluminium/Alu	SEE NOTE △2	black/schwarz	3	
		1	1												Plug housing EMV/hood	Aluminium/Alu		grey/grau	2	
														1	Plug housing EMV/hood	Aluminium/Alu		grey/grau	1	
1-3	1-2	1-1	1-0	0-9	0-8	0-7	0-6	0-5	0-4	0-3	0-2	4-5	3-5	0-1	DESCRIPTION / BENENNUNG	MATERIAL	SURFACE/OBERFLÄCHE	COLOR/FARBE	ITEM NO.	REMARKS / BEMERKUNGEN
EMV.24/64.STO.1.M32.G	EMV.24/64.STS.1.M32.G	EMV.24/64.STO.1.21.G+STS.1.21.G	EMV.24/64.STO.1.29.G+STS.1.29.G	EMV-K.24/64.STO.1.29.G	EMV-K.24/64.STS.1.29.G	EMV-K.24/64.STO.1.29.G+STS.1.29.G	EMV.24/64.STO.1.29.G+STS.1.29.G	EMV.24/64.STO.1.29.G+STS.1.29.G	EMV.24/64.STO.1.29.G+STS.1.29.G	EMV.24/64.STO.1.29.G+STS.1.29.G	EMV.24/64.STO.1.29.G+STS.1.16.G	EMV-K.24/64.STS.1.29.G	EMV.24/64.STS.1.29.G	EMV.24/64.STS.1.29.G+STO.1.29.G	ORDERING TEXT/BESTELLTEXT					

THIS DRAWING IS A CONTROLLED DOCUMENT.
DIESE ZEICHNUNG IST EIN KONTROLLIERTES DOKUMENT.

DIMENSIONS: MASSE\NHEITEN: mm

TOLERANCES UNLESS OTHERWISE SPECIFIED:
ALLGEMEINTOLERANZEN
n. ISO 8015
n. ISO 2768 - mH - E
n. ISO 16901 - 40
0 PLC ± –
1 PLC ± –
2 PLC ± –
3 PLC ± –
4 PLC ± –
ANGLES/WINKEL ± –

MATERIAL –

FINISH/OBERFLAECHE/FARBE –

DWN 19.02.1999 Schneider
CHK 19.02.1999 Schneider
APVD –
PRODUCT SPEC PRODUKTSPEZ. —
APPLICATION SPEC VERABEITUNGSSPEZ. —
WEIGHT GEWICHT —

TE Connectivity

NAME
Hood EMV size8
Plug housing EMV Bg8

SIZE	CAGE CODE	DRAWING NO ZEICHNUNGS-NR.	RESTRICTED TO NUR FUER
A2	00779	C-1102755	—

CUSTOMER DRAWING/KUNDENZEICHNUNG
SCALE MASSSTAB 1:1
SHEET BLATT 1 VON 1
REV B21

1102755

Notes:

1. Surface: Varnish grey
   Varnish black
   chromitAL TCP passivation
2. Varnish on the inside not necessarily
3. Packaging guantity 5 pieces

Bemerkungen:

1. Surface: Lackierung grau
   Lackierung grau
   chromitAL TCP passivation
2. Lackierung im Gehäuseinnere ist nicht notwendig
3. Verpackungsmenge 5 Stück