MATERIAL NUMBER	ENG NO.	DESCRIPTION	INSULATING KEYING POSITION	HORSEPOWER RATING
1122191029	ARC30MHA01	ARC 30A MH 125VAC 1P+N+G	7	1 HP
1122191030	ARC30MHB02	ARC 30A MH 250VAC 2P+G		3 HP
1122191031	ARC30MHB03	ARC 30A MH 250VAC 3P+G		5 HP
1122191032	ARC30MHAB04	ARC 30A MH 125/250VAC 2P+N+G		NA
1122191033	ARC30MHC02	ARC 30A MH 208VAC 2P+G	16	NA
1122191034	ARC30MHC03	ARC 30A MH 208VAC 3P+G		5 HP
1122191035	ARC30MHAC05	ARC 30A MH 120/208VAC 3P+N+G		NA
1122191036	ARC30MHD01	ARC 30A MH 277VAC 1P+N+G	4	NA
1122191037	ARC30MHE02	ARC 30A MH 480VAC 2P+G		NA
1122191038	ARC30MHE03	ARC 30A MH 480VAC 3P+G		10 HP
1122191039	ARC30MHDE05	ARC 30A MH 277/480VAC 3P+N+G		NA
1122191040	ARC30MHF02	ARC 30A MH 600VAC 2P+G	14	NA
1122191041	ARC30MHF03	ARC 30A MH 600VAC 3P+G		NA
1122191042	ARC30MHGF05	ARC 30A MH 347/600VAC 3P+N+G		NA

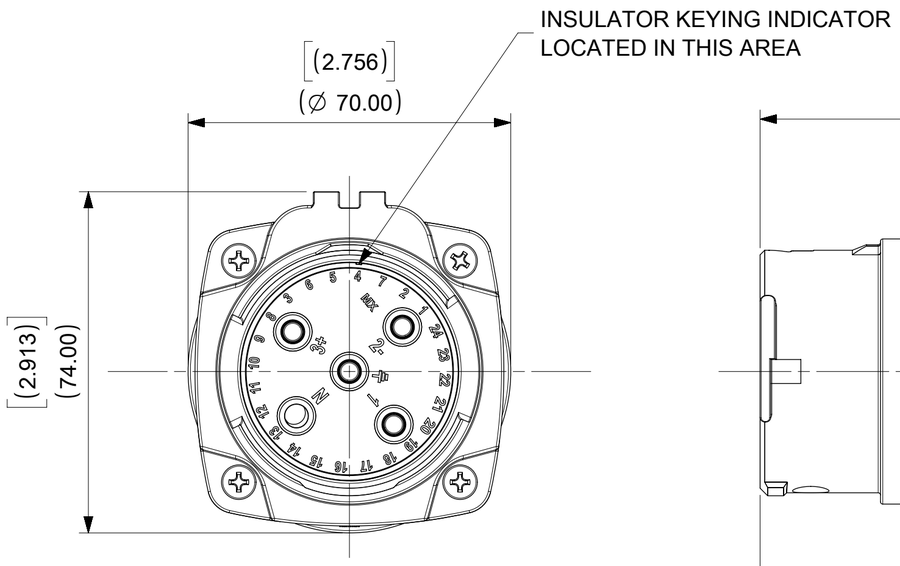

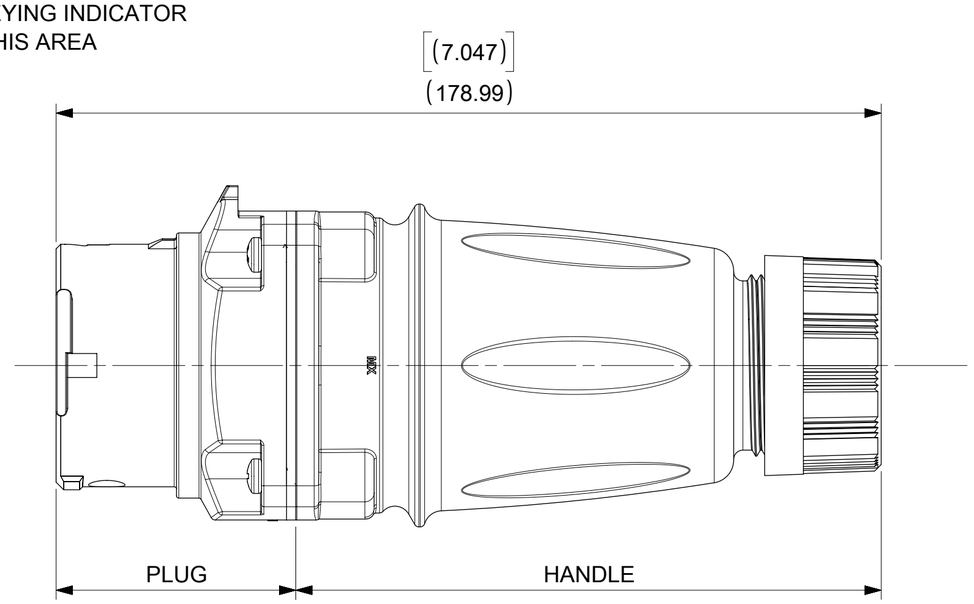

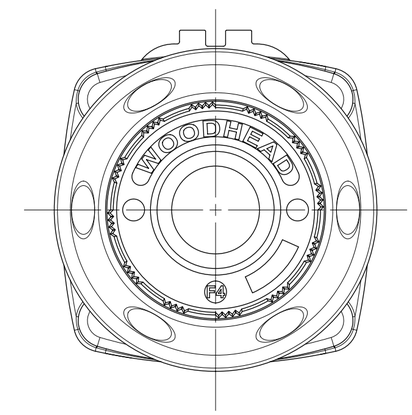

NOTES:

MATERIALS:
- HOUSINGS AND INSULATORS: GLASS FILLED PBT
- CONTACTS: COPPER ALLOY WITH A SILVER NICKEL TIP, SILVER PLATED
- MOUNTING GASKETS: SILICONE
- GROMMET - RUBBER
- FRICTION RING - NATURAL POLYETHYLENE
- COMPRESSION NUT - BLACK PBT
- SELF TAPPING SCREWS - STAINLESS STEEL
- PLUG CAP - RUBBER

RATINGS:
- CURRENT: 30 AMPS
- VOLTAGE AND HORSEPOWER: SEE TABLE
- OPERATING TEMPERATURE: -25°C(-13°F) TO 60°C(140°F)
- ENVIRONMENTAL: TYPE 4X, IP69K
- WIRING CAPACITY: 12 AWG MIN. TO 8 AWG MAX.
- TORQUE TERMINAL SCREWS TO 1.7N-M (15 in/lbs)
- AGENCY: UL LISITING PENDING
  - SWITCH RATED RECEPTACLE/CONNECTOR
  - BRANCH CIRCUIT DISCONNECT SWITCH
  - MOTOR CIRCUIT DISCONNECT SWITCH IF HP RATED

PLUG, HANDLE AND PLUG CAP(NOT SHOWN IN ALL VIEWS) ARE PACKAGED AS SUB-ASSEMBLIES AND WILL REQUIRE END USER ASSEMBLY.

THIS DRAWING REPLACES SD-112219-103.

ARC30MHE03 SHOWN

GROMMET P/N	GROMMET COLOR	CABLE DIAMETER RANGE
1301800411	GRAY	12.7mm - 15.9mm (0.500" - 0.625")
1301800283	ORANGE	15.9mm - 19.0mm (0.625" - 0.750")
1301800413	BLACK	19.0mm - 22.2mm (0.750" - 0.875")

DOCUMENT STATUS	P1	RELEASE DATE	2018/11/05 17:31:35

SYMBOLS: FA = 0; FC = 0; FD = 0; S = 0; ▼ = 0; C = 0; ☒ = 0; ■ = 0; C = 0

THIS DRAWING CONTAINS INFORMATION THAT IS PROPRIETARY TO MOLEX ELECTRONIC TECHNOLOGIES, LLC AND SHOULD NOT BE USED WITHOUT WRITTEN PERMISSION

DIMENSION UNITS	SCALE
INCH	1:1

GENERAL TOLERANCES (UNLESS SPECIFIED)

	MM	INCH
4 PLACES	±	±
3 PLACES	±	±
2 PLACES	±	±
1 PLACE	±	±
0 PLACES	±	±
ANGULAR TOL	± °	

DRAFT WHERE APPLICABLE MUST REMAIN WITHIN DIMENSIONS

CURRENT REV DESC: ADDED 10HP,NEW NOTES

EC NO: 604773
DRWN: MJANTELEZIO 2018/09/20
CHK'D: JFMURPHY 2018/11/05
APPR: JFMURPHY 2018/11/05

INITIAL REVISION:
DRWN: DRWN BY XXXX/XX/XX
APPR: APPR BY XXXX/XX/XX

THIRD ANGLE PROJECTION | DRAWING: C-SIZE | SERIES: 112219

molex

ARC 30A MH 480VAC 3P+G

PRODUCT CUSTOMER DRAWING

DOCUMENT NUMBER	DOC TYPE	DOC PART	REVISION
1122191038	PSD	000	B2

MATERIAL NUMBER	CUSTOMER	SHEET NUMBER
	GENERAL MARKET	1 OF 1

FORMAT: Eng-lega-master-tb-prod-C
REVISION: D
DATE: 2018/01/18