MAT'L NO.	INTERNAL THREAD	DIM. "A"	MATERIAL / PLATING
74962-1000	4-40 UNC-2B	.338 / 8.60	STAINLESS STEEL 303
74962-2000	M3x0.5 CLASS 6H	.338 / 8.60	
74962-3000	4-40 UNC-2B	.378 / 9.60	STAINLESS STEEL 303
74962-4000	M3x0.5 CLASS 6H	.378 / 9.60	
74962-0005	4-40 UNC-2B	.421 / 10.69	STAINLESS STEEL 303
74962-0006	M3x0.5 CLASS 6H	.421 / 10.69	

NOTES:
1. PARTS ARE PACKAGED IN POLY BAGS CONSISTING OF 40 PIECES.
2. INTERNAL AND EXTERNAL THREADS TO WITHSTAND A MINIMUM APPLIED TORQUE OF 5 lbf in/5.76 kgf cm.

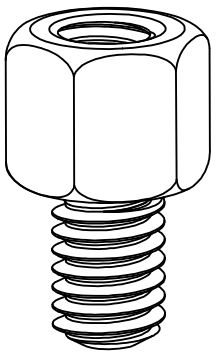

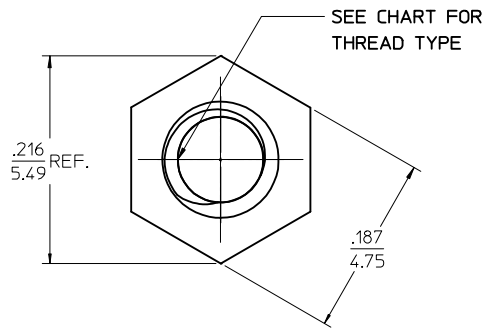

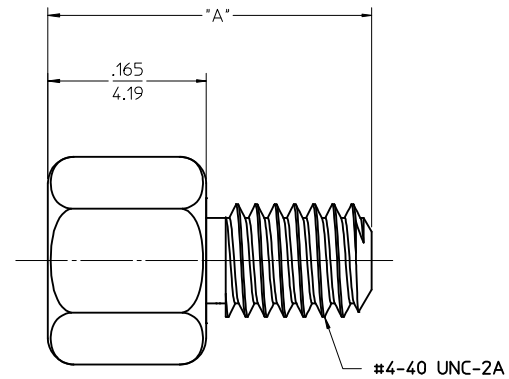

INITIAL RELEASE
EC NO: UCP2015-0921
DRWN:TIBARRA 2014/08/01
CH'KD:MPOFF 2014/08/29
APPR:SMILLER 2014/09/04
A
REV
DESCRIPTION

QUALITY SYMBOLS
F/A =0
F/C =0
F/P =0

GENERAL TOLERANCES (UNLESS SPECIFIED)

	mm	INCH
4 PLACES	± ---	± ---
3 PLACES	± ---	± .010
2 PLACES	± 0.25	± ---
1 PLACE	± ---	± ---
0 PLACE	±	±

ANGULAR ±1/2°
DRAFT WHERE APPLICABLE MUST REMAIN WITHIN DIMENSIONS

DIMENSION STYLE: IN/MM
SCALE: 10:1
DESIGN UNITS: INCH
THIRD ANGLE PROJECTION

		DATE
DRAWN BY	TIBARRA	2014/08/01
CHECKED BY	MPOFF	2014/08/29
APPROVED BY	SMILLER	2014/09/04

TITLE: TDP 3/16" HEX JACKPOST

molex

MATERIAL NO.: SEE TABLE
DOCUMENT NO.: SD-74962-1000
SHEET NO.: 1 OF 1
SIZE: C

THIS DRAWING CONTAINS INFORMATION THAT IS PROPRIETARY TO MOLEX INCORPORATED AND SHOULD NOT BE USED WITHOUT WRITTEN PERMISSION

tb_frame_C_P_AM_T
Rev. G 2012/01/11

MAT'L NO.	INTERNAL THREAD	EXTERNAL THREAD	DIM. "A"	MATERIAL / PLATING
74962-1110	4-40 UNC-2B	4-40 UNC-2A	.338 / 8.60	STAINLESS STEEL 303 / NYLON TORQUE PATCH

NOTES:
1. PARTS ARE PACKAGED IN POLY BAGS CONSISTING OF 40 PIECES.
2. INTERNAL AND EXTERNAL THREADS TO WITHSTAND A MINIMUM APPLIED TORQUE OF 5 lbf in/5.76 kgf cm.
3. NYLOK® TORQUE PATCH LOCATED TO THE LEFT OF THE FIRST OR SECOND FULL THREADS AND COVERS 3 THREADS MINIMUM.

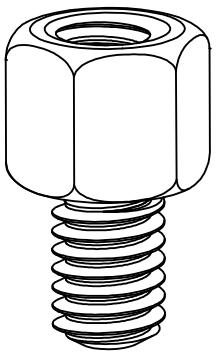

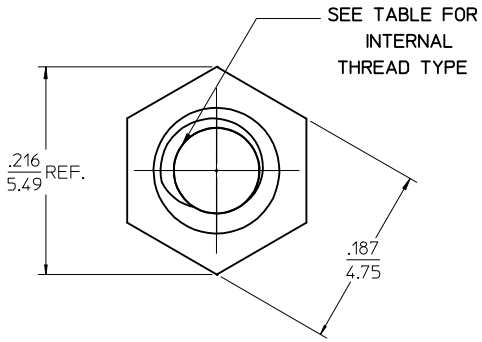

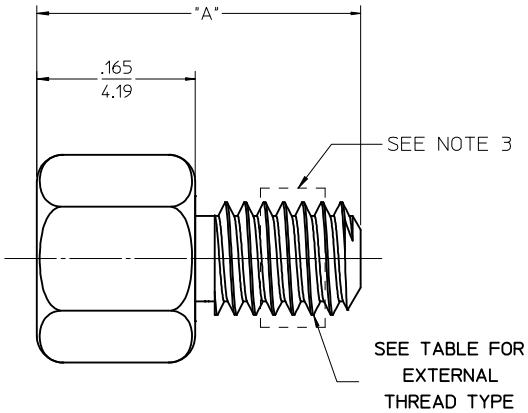

MOD NOTE 3
EC NO: UCP2016-1139
DRWN:TIBARRA 2015/09/14
CH'KD:MCAIN 2015/09/14
APPR:SMILLER 2015/09/17
REV B
DESCRIPTION

QUALITY SYMBOLS
F_A =0
F_C =0
F_P =0

GENERAL TOLERANCES (UNLESS SPECIFIED)

	mm	INCH
4 PLACES	± ---	± ---
3 PLACES	± ---	± .010
2 PLACES	± 0.25	± ---
1 PLACE	± ---	± ---
0 PLACE	±	±

ANGULAR ±1/2°

DRAFT WHERE APPLICABLE MUST REMAIN WITHIN DIMENSIONS

DIMENSION STYLE: IN/MM
SCALE: 10:1
DESIGN UNITS: INCH
THIRD ANGLE PROJECTION

DRAWN BY	TIBARRA	DATE 2015/07/09
CHECKED BY	DMORGAN	DATE 2017/07/09
APPROVED BY	SMILLER	DATE 2015/08/14

TITLE: TDP 3/16" HEX JACKPOST WITH TORQUE PATCH

molex

MATERIAL NO.: SEE TABLE
DOCUMENT NO.: SD-74962-1110
SHEET NO.: 1 OF 1
SIZE: C

THIS DRAWING CONTAINS INFORMATION THAT IS PROPRIETARY TO MOLEX INCORPORATED AND SHOULD NOT BE USED WITHOUT WRITTEN PERMISSION